amateur radio

JOURNAL OF THE WIRELESS INSTITUTE OF AUSTRALIA

VOL. 47, No. 10 OCTOBER 1979

FEATURED IN THIS ISSUE:

- ★ SSB TRANSMITTER FOR 13 cm
- ★ ROOF RACK ANTENNA FOR HF
- ★ RIGID COAXIAL LINE
- ★ REVIEW — TONO 7000 COMMUNICATION COMPUTER
- ★ WARC 79 & THE AMATEUR SERVICE IN REGION 3

Registered for posting as a Publication — Category "B".

CHIRNSIDE ELECTRONICS

CHIRNSIDE AUSTRALIAN MADE ANTENNAS.

SOLID CONSTRUCTION.
DUO BAND 15-10 M
8 dB forward
20 dB front to back.

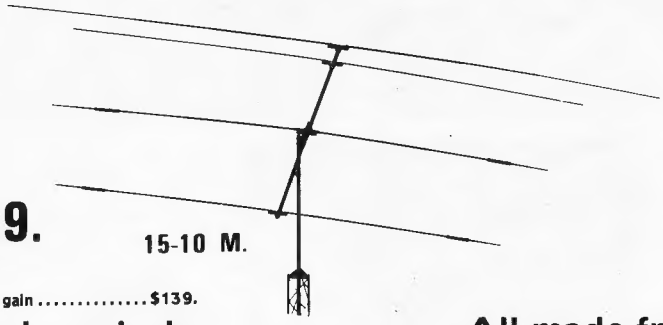

15-10 M.

ONLY **$139.**

Duoband AB4-2 15-10M 8dB gain ..... $139.

100 MPH. wind survival.

WRITE OR GIVE US A CALL TODAY!

All items subject to stock availability

MONO BAND BEAMS.

APPROX. GAIN.

AB3-10. 3 el. 10M. 12' boom. 8 dB. ..... $59.
AB-4-10. 4 el. 10M. 15' boom. 10 dB. ..... $74.
AB-5-10. 5 el. 10M. 19'6" boom. 12 dB. ..... $89.
AB6-10. 6 el. 10M. 24' boom. 13 dB. ..... $105.
AB3-15. 3 el. 15M. 16' boom. 8 dB. ..... $89.
AB4-15. 4 el. 15M. 20' boom. 10 dB. ..... $114.
AB5-15. 5 el. 15M. 24' boom. 12 dB. ..... $139.
AB3-20. 3 el. 20M. 8 dB. ..... $139.
AB4-20. 4 el. 20M. 10 dB. ..... $189.

Rotateable Dipole 10-30 MHz. ..... $24.
Matching 50 ohm balun 1:1 ..... $15.

All made from heavy wall aluminium with sturdy construction.

HY-GAIN ANTENNAS.

TH6-DXX. 6el. 20-15-10M. ..... $270.
TH3-JR. 3el. 20-15-10M. ..... $175.
18-AVT. 80-10M trapped vertical. ..... $POA.
BN-86. 1:1 matching balun. ..... $23.
..... $20 with beam.

MOBILE HELICAL WHIPS.

80M. 7' long. ..... $22.
80M. 6' long. $21
40M. 6' long. $20
20M. 6' long. ..... $20.
15M. 6' long. ..... $20.
10M. 6' long. ..... $20.

Bumper mounts to suit. ..... $9.
SET OF ALL FIVE FOR ONLY $95 INCLUDING BUMPER MOUNT.

bankcard

It is worth coming a little further to get a lot better quality and service

YAESU.

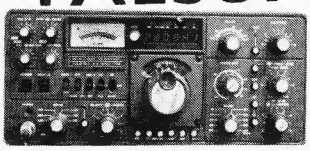

FT-101Z. 160-10M Transceiver. analog dial. ..... $750.
FT-101ZD. 160-10M Transceiver. Digital. ..... $898.
optional digital display for FT-101Z. ..... $148.
optional Fan. ..... $39.
optional DC-DC converter. ..... $79.
YE-7A Hand mike. ..... $15.
YD-148 Desk mike ..... $49.
FT-901DM. 160-10M Transceiver. ..... $1539.
FV-901. ext.VFO for FT-901 & FT-101Z. ..... $429.
YO-901. Panoramic adapter monitorscope. ..... $495.
FC-901. Antenna coupler. ..... $239.
FTV-901. Converter. 6M,2M,70 cm. all inc. ..... $829.
FTV-901. Converter. 6M,2M. only. ..... $539.
YR-901. Morse reader. ..... $TBA.
SP-901. ext. speaker. ..... $53.
FRG-7. Communication receiver. ..... $309.
FRG-7000. Digital communication receiver. ..... $585.
LF-2A Narrow band filter for FRG-7. ..... $20.
FL-110. Solid state linear amp. 160-10M. ..... $229.
FT-7B. 80-10M Transceiver. ..... $599.
FP-12. 12 Amp. power supply for FT-7B. ..... $159.
YC-7B. Digital display for FT-7B. ..... $139.
QTR-24 24 hr. World clock. ..... $33.
QTR-24D. Deluxe 24 hr. World clock. ..... $POA.
FT-227R. 2M Digital transceiver. ..... $309.
FT-227RA. 2M. Scanning digital transceiver. ..... $379.
FT-227RB. 2M Digital programable transceiver. . $POA.
YP-150. Dummy load/Watt meter. ..... $109.
FF-50DX. Low pass filter. 2kw. ..... $38.
NEW FT-107 & FT-107Drange. ..... $TBA.

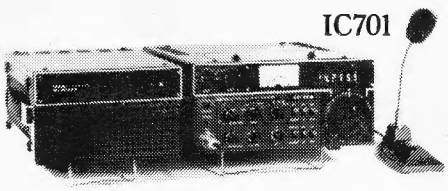

The fabulous state of the art ICOM IC701 solid state transceiver.

IC-701. 160-10M HF Transceiver. ..... $POA.
IC-701PS. Power supply. ..... $249.
IC-22S FM 10 W. 2M Portable transceiver. ..... $289.
IC-211. All mode 2M transceiver. ..... $769.
RM-3 Remote control for IC-701 or 211 ..... $157.

MISCELLANEOUS ACCESSORIES.

"Tono" 0-7000 communication computer. ..... $839.
Leader dip meter. ..... $89.
Leader ham oscilloscope. ..... $299.
Other Leader test equipment available.
Diawa antenna coupler CNW-217. ..... $155.
Diawa SWR meter. CN-620. ..... $95.
Diawa Speech processor. RF-660. ..... $105.
TSW-120 2 pos. coax switch. ..... $15.
590G 5 position coax switch. ..... $38.
LP-42. Drake low pass filter. 200W. ..... $16.
Bumper mounts 3-8" x 24 thread. ..... $10.
RG-58U thin coax. ..... 40c. per M.
Porcelain egg insulators. ..... 50c.
Hi-Q balun 1:1 ..... $15.95.

KENWOOD.

TS-520S. 160-10M Transceiver. ..... $635.
TS-120V. 80-10M Digital transceiver.
10 W output. ..... $POA
TS-120S 80-10M Digital transceiver.
100W output. ..... $699.
AT-120. Antenna coupler. ..... $94.
VFO-120 Remote VFO. ..... $145.
TS-180S. 160-10M. Digital transceiver,
4 tuning memories. ..... $1225.
PS-20. 13.8 V DC. Power supply for TS-120V. ..... $110.
PS-30. Power supply for TS-120 & TS-180S. $199.
AT-180. Antenna coupler/SWR and
RF power meter. ..... $159.
AT-200. Antenna coupler/SWR/ Power meter. ..... $159.
SM-220. Station monitor. ..... $399.
TL-922. 160-10M linear amplifier. 2kw. ..... $1189.
MC-10. Hand mic. ..... $21.
MC-35S. Noise cancelling hand mic. ..... $26.
MC-50. Desk mic. ..... $55.

ROTATORS

EMOTATOR

103LBX. Medium Duty. ..... $164.
502CXX. Heavy Duty. ..... $243.
1102MXX. Extra Heavy Duty. ..... $369.
1103MXX. Extra Extra Heavy Duty. ..... $395.
502 Mast Clamp. ..... $32.
103 Mast Clamp. ..... $22.
VCTF-7. 7 Core Cable. per Metre. $1.20
VCTF-6. 6 Core Cable. per Metre. ..... $1.00.

equipment sold by Chirnside Electronics is pre-sales checked and covered by 90 day warranty and expert after sales service.

All prices include Sales Tax. Freight and Insurance extra.
Prices and specifications are subject to change without notice.

We handle and stock most Yaesu. Kenwood. Icom. Equipment.

CHIRNSIDE ELECTRONICS. 26 Edwards Road, Lilydale, 3140. phone (03) 726 7353.

Published monthly as its official journal by the Wireless Institute of Australia, founded 1910.

amateur radio

OCTOBER 1979
VOL. 47, No. 10

PRICE: 90 CENTS

Registered Office:
2/517 Toorak Road,
Toorak, Victoria, 3142.

EDITOR:
BRUCE BATHOLS* VK3UV

ASSISTANT EDITORS:
RON COOK* VK3AFW
GIL SONES* VK3AUI

TECHNICAL EDITOR:
BILL RICE* VK3ABP

CONTRIBUTING EDITORS:
BOB ARNOLD VK3ZBB
MIKE BAZLEY VK6HD
ROD CHAMPNESS VK3UG
SYD CLARK* VK3ASC
RON FISHER* VK3OM
ERIC JAMIESON VK5LP
PETER MILL VK3ZPP
LEN POYNTER* VK3ZGP
BILL VERRALL VK5WV
WALLY WATKINS VK2DEW

DRAFTING:
NEIL OSBORNE* VK3YEI

PHOTOGRAPHER:
REG GOUDGE —

BUSINESS MANAGER:
PETER DODD VK3CIF

ADVERTISING AND AR LIAISON:
MARK STEPHENSON* VK3NOY

***Member of Publications Committee**

Enquiries and material to:
The Editor,
PO Box 2611W, GPO Melb., 3001

Copy is required by the **first of each month.** Acknowledgement may not be made unless specially requested. All important items should be sent by certified mail. The editor reserves the right to edit all material, including Letters to the Editor and Hamads, and reserves the right to refuse acceptance of any material, without specifying a reason.

Advertising: Material should be sent direct to **P.O. Box 150, Toorak, Vic., 3142,** by the **25th of the second month preceding publication. Phone: (03) 24 8652.**—Hamads should be sent direct to **P.O. Box 150, Toorak, Vic., 3142,** by the **1st of the month preceding publication.**

Trade Practices Act: It is impossible for us to ensure that advertisements submitted for publication comply with the Trade Practices Act 1974. Therefore advertisers and advertising agents will appreciate the absolute need for themselves to ensure that the provisions of the Act are complied with strictly. Readers are reminded that, when buying, obtaining or receiving goods from overseas including goods listed in advertisements by overseas organisations in this Journal, Customs Import duties and Sales Tax may be levied on the goods at the time of importation. These amounts, if any, are payable by the purchaser unless the terms of sale state otherwise and the seller has made specific provision to this effect in his quotation to the buyer or unless other prior arrangements are in force between the buyer and the seller.

Printers: EQUITY PRESS PTY. LTD.
50-52 Islington Street, Collingwood, 3066
Tel.: 41 5054, 41 5055

CONTENTS

TECHNICAL

Diamond in the Sky 15
Emergency Light for the Shack 14
Review: Tono Theta 7000 Communication Computer 18
Rigid Coaxial Line 13
Roof Rack Antenna for HF 12
Simple Regulated Power Supply 17
SSB Transmitter for the 13 cm Band 8
Technical Correspondence 38
Try This 21
24 Hour Clock 19

GENERAL

My Old Flame 21
My OM — An Idiopathic Narcoleptic Ham 22
NOVICE NOTES 23
Finding the Rare DX
How to get the QSL Card
Direct or via the Bureau
Time
Calling CQ
Had a Woodpecker in the Pile lately?
Remembrance Day Opening Address 40
Ten Commandments of Human Relations 16
WARC 79 and the Amateur Service in Region 3 31

DEPARTMENTS

Amateur Satellites 20
Around the Trade 48
Awards Column 47
Book Review 38
Contests 48
Divisional Notes 49
Hamads 49
Ionospheric Predictions 39
International News 38
Intruder Watch 38
Letters to the Editor 46
Magazine Index 46
Obituary 50
QSP 4, 33, 40
Silent Keys 50
VHF/UHF — an expanding world 29
WIANEWS 5
WICEN 45
You and DX 39

ADVERTISERS' INDEX 50

Cover Photo

WHEN OOTs MEET

When two OOTs eyeball, for the first time after more than 40 years since their first QSO, there's an awful lot of sentiment, nostalgia and not a little emotion in the scene — and, in the case of Bill Pickard G8KP (right) and Al Shawsmith VK4SS/ex VK4SA (left), a small bit of personal history was made.

When they QSOd, way back in 1939, the contact was Bill's first VK4 and Al's first G8 — two firsts. They subsequently never kept skeds but did QSO again on occasions after WWII. Now Bill, during February, has paid a visit to all his Ham cobbers in Down Under and, at Al's QTH in Brisbane, they swapped back their original 1939 QSL cards, which each had sent to the other prior to WWIII. Not something that's done every day of the week after forty years. They are pictured here, in the swapping back ritual, in Al's vintage wireless museum, where the same type of rigs they both used, i.e. MOPAs at 25-50 watts, are on display.

Needless to say, the topic was on past events and DX doings. Both are brass pounders: G8KP obtained his licence in 1936 and VK4SS in 1935. Bill is FOC — First Class Operators' Club — and Al is HSC — International High Speed Club.

G8KP/VK4AKP has now returned home but wants it put on record that he and his good YF Elsie were overwhelmed with Sunshine State hospitality by the VK4 boys, who rolled out the red carpet and gave them the VIP treatment — which only goes to prove that AR is the Prince of Pastimes.

WIRELESS INSTITUTE OF AUSTRALIA

Federal President: Dr. D. A. Wardlaw VK3ADW
Federal Council:
VK1 Mr. R. G. Henderson VK1RH
VK2 Mr. T. I. Mills VK2ZTM
VK3 Mr. G. A. G. Williams VK3ZXW
VK4 Mr. A. R. F. McDonald VK4TE
VK5 Mr. C. J. Hurst VK5HI
VK6 Mr. N. R. Penfold VK6NE
VK7 Mr. R. K. Emmett VK7KK
Staff: Mr. P. B. Dodd VK3CIF, Secretary.
Part-time: Col. C. W. Perry, Mrs. J. M. Seddon and Mr. Mark Stephenson (AR advertising).
Executive Office: P.O. Box 150, Toorak, Vic., 3142. 2/517 Toorak Rd., Toorak, Ph. (03) 24 8652.
Divisional information (all broadcasts are on Sundays unless otherwise stated):

ACT:
President — Mr. A. Davis VK1DA
Secretary — Mr. F. Robertson-Mudie VK1NAV
Broadcasts— 3570 kHz and 2m Ch. 6 (or 7): 10.00Z.

NSW:
President — Mr. F. S. Parker VK2NFF
Secretary — Mr. T. I. Mills VK2ZTM
Broadcasts— 1825, 3595, 7146 kHz, 28.32, 52.1, 52.525, 144.1, 145.6, 146.4, Rptr. Ch. 3 — Gosford, Ch. 4 — Lismore, Ch. 5 Wollongong, Ch. 8 — Dural. Evening 0930Z. Relays on 160, 80 and 10m, VHF and Reptr. Ch. 3, Ch. 5, Ch. 8, and Hunter Branch, Mondays 0930Z on 3595 kHz, 10m, and Ch. 3 and 6. RTTY Sunday 0030Z 7045, 14090 kHz, Ch. 52, 0930Z 3545 kHz, Ch. 52.

VIC.:
President — Mr. E. J. Buggee VK3ZZN
Secretary — Mr. J. A. Adcock VK3ACA
Broadcasts— 1840, 3600, 7135 kHz — 53.032 AM, 144.2 USB and 2m Ch. 2 (5) repeater: 10.30 local time.
Gen. Mtg. — 2nd Wed., 20.00.

QLD.:
President — Mr. A. J. Aarsse VK4QA
Secretary — Mr. W. L. Gielis VK4ABG
Broadcasts— 1825, 3580, 7146, 14342, 21175, 28400, kHz; 2m (Ch. 42, 48): 09.00 EST.
Gen. Mtg. — 3rd Friday.

SA:
President — Mr. I. J. Hunt VK5QX
Secretary — Mr. W. M. Wardrop VK5NWM
Broadcasts— 1820, 3550, 7095, 14175 kHz; 28.5 and 53.1 MHz, 2m (Ch. 8): 09.00 S.A.T.
Gen. Mtg. — 4th Tuesday, 19.30.

WA:
President — Mr. Ross Greenaway VK6DA.
Secretary — Mr. Peter Savage VK6NCP.
Broadcasts— 3560, 7075, 14100, 14175 kHz. 28.485, 52.290 MHz. 2 metres Ch. 2 Perth, Ch. 6 Wagin. Time 0130Z.
Gen. Mtg. — 3rd Tuesday.

TAS.:
President — Mr. I. Nicholls VK7ZZ
Secretary — Mr. P. T. Blake, VK7ZPB
Broadcasts— 7130 (AM) kHz with relays on 2m Ch. 2 (S), Ch. 8 (N), Ch. 3 (NW), 09.30 EST.

NT:
President — Dick Klose VK8ZDK
Vice-Pres. — Barry Burns VK8DI
Secretary — Graeme Challinor VK8GG
Broadcasts— Relay of VK5WI on 3.55 MHz and on 146.5 MHz at 2330Z. Slow morse transmission by VK8HA on 3.555 MHz at 1000Z almost every day.

Postal Information:
VK1 — P.O. Box 46, Canberra, 2600.
VK2 — 14 Atchison St., Crows Nest, 2065 (Ph. (02) 43 5795 Tues & Thurs (10.00-14.00h). P.O. Box 123, St. Leonards, NSW 2065.
VK3 — 412 Brunswick St., Fitzroy, 3065 (Ph. (03) 41 3535 Weekdays 10.00-15.00h).
VK4 — G.P.O. Box 638, Brisbane, 4001.
VK5 — G.P.O. Box 1234, Adelaide, 5001 — HQ at West Thebarton Rd., Thebarton.
VK6 — G.P.O. Box N1002, Perth, 6001.
VK7 — P.O. Box 1010, Launceston, 7250.
VK8 — (Incl. with VK5), Darwin AR Club, P.O. Box 37317, Winnellie, N.T., 5789.

Slow morse transmissions — most week-day evenings about 09.30Z onwards around 3550 kHz.

VK QSL BUREAUX

The following is the official list of VK QSL Bureaux, all are inwards and outwards unless otherwise stated.

VK1 — QSL Officer, G.P.O. Box 46, Canberra, A.C.T. 2600.
VK2 — QSL Bureau, C/- Hunter Branch, P.O. Teralba, N.S.W. 2284.
VK3 — Inwards QSL Bureau, Mr. E. Trebilcock, 340 Gillies Street, Thornbury, Vic. 3071.
VK3 — Outwards QSL Bureau, Mr. R. R. Prowse, 83 Brewer Road, Bentleigh, Vic. 3204.
VK4 — QSL Officer, G.P.O. Box 638, Brisbane, Qld., 4001.
VK5 — QSL Bureau, Mr. Geo. Luxon VK5RX, 203 Belair Road, Torrens Park, S.A. 5062.
VK6 — QSL Bureau, Mr. J. Rumble VK6RU, G.P.O. Box F319, Perth, W.A. 6001.
VK7 — QSL Bureau, G.P.O. Box 371D, Hobart, Tas. 7001.
VK8 — QSL Bureau, C/- VK8HA, P.O. Box 1418, Darwin, N.T. 5794.
VK9, 0 — Federal QSL Bureau, 23 Landale Street, Box Hill, Vic. 3128.

QSP — WARC 79: THE LAST LEG

As you read this I will be in Geneva as a member of the Australian delegation to WARC 79.

Over the past three years much has been written in amateur journals about this Conference. It would have been apparent to all that the amateurs of the world were not taking this Conference lightly. Least of all those in Australia.

The amateurs were probably one of the first groups to start moving in their preparation. Over three and a half years ago the WIA was invited to attend the meeting convened by the P. and T. Department for the purpose of setting up the Australian Preparatory Group to prepare for WARC 79. I attended that meeting and have attended every meeting since.

The world-wide co-operation and co-ordination between the member societies of the IARU under the leadership of the President, Noel Eaton VE3CJ, and reinforced by the three Regional Associations has led to a reasonably unified and consistent case for retention of frequencies, to the addition of new bands to improve the HF family of frequencies and to give the Amateur Satellite Service more reasonable access to the spectrum.

Do not think all this just happened. It is in fact due to the very hard work of a nucleus of dedicated amateurs who have sought advice and conferred together in order to become as knowledgeable as possible so as to apply that knowledge to the best advantage.

At home here in Australia the strong financial support of the amateur community has enabled us to provide two members of the Australian delegation. This support again shows the importance with which the Australian amateur views the Conference.

The preliminary phase is now over. Let us hope the results of the Conference may come up to our reasonable expectations, as well they might. Naturally we will be pushing Australia's proposals as hard as possible, which in the amateur field, I feel are very reasonable.

Again my thanks for your support at this vital time.

DAVID WARDLAW VK3ADW
Federal President. ■

WIA (FEDERAL) DIRECTORY

MEMBERS OF EXECUTIVE
Dr. D. A. Wardlaw VK3ADW, Federal President.
Mr. P. A. Wolfenden VK3ZPA, Exec. Vice-Chairman.
Mr. K. C. Seddon VK3ACS, Member.
Mr. H. L. Hepburn VK3AFQ, Member.
Lt.-Col. J. McL. Bennett VK3ZA, Member.
Mr. C. D. H. Scott VK3BNG, Hon. Treas.
Secretary: Peter B. Dodd VK3CIF.

IARU LIAISON OFFICER AND IMMEDIATE PAST FEDERAL PRESIDENT
Mr. M. J. Owen VK3KI.

INTRUDER WATCH CO-ORDINATOR
Mr. A. W. H. Chandler VK3LC.

FEDERAL REPEATER SUB-COMMITTEE
Mr. K. C. Seddon VK3ACS, Chairman.
Mr. J. J. L. Martin VK3ZJC.
Mr. P. B. Mill VK3ZPP.

MANAGING EDITOR AND CHAIRMAN OF PUBLICATIONS COMMITTEE
Mr. B. Ba:hols VK3UV.

FEDERAL BROADCAST TAPE CO-ORDINATORS:
Mr. R. Fisher VK3OM.
Mr. W. Roper VK3ARZ.

FEDERAL EDUCATION CO-ORDINATOR
Mr. G. F. Scott VK3ZR.

FEDERAL HISTORIAN
Mr. G. M. Hull VK3ZS.

FEDERAL CONTESTS MANAGER
Mr. W. A. Watkins VK2DEW

FEDERAL AWARDS MANAGER
Mr. W. D. Verrall VK5WV.

FEDERAL VHF/UHF ADVISORY COMMITTEE
Mr. K. G. Malcolm VK3ZYK, Chairman.
Mr. P. A. Wolfenden VK3ZPA.
Mr. I. W. Cowan VK3BGH.
Mr. L. Janes, VK3BKF.
Mr. J. J. L. Martin VK3ZJC.
Mr. K. L. Phillips VK3AUQ.
Mr. W. M. Rice VK3ABP.

FEDERAL RTTY COMMITTEE
Mr. H. P. Mulligan VK2ABH, Chairman.
Mr. J. J. Lupton VK2BVJ.
Mr. R. E. Taylor VK2AOE.

PROJECT ASERT COMMITTEE
Mr. R. C. Arnold VK3ZBB, Chairman.
Mr. P. A. Wolfenden, VK3ZPA/NIB.
Mr. K. G. McCracken VK2CAX.
Mr. L. Janes VK3BKF.
Mr. G. C. Brown VK3YGB.

AMATEUR SATELLITES
Mr. R. C. Arnold VK3ZBB.

FEDERAL WICEN CO-ORDINATOR
Mr. R. G. Henderson VK1RH.

VK/ZL/O CONTEST MANAGER (VK)
Mr. N. R. Penfold VK6NE.

FEDERAL VIDEOTAPE CO-ORDINATOR
Mr. J. F. Ingham VK5KG.

FEDERAL COUNCILLORS
Please see main Directory.

ALTERNATE FEDERAL COUNCILLORS
VK1 — Mr. A. Davis VK1DA.
VK2 — Mr. P. B. Card VK2ZBX.
VK3 — Mr. A. R. Noble VK3BBM.
VK4 — Mr. D. T. Laurie VK4DT.
VK5 — Mr. C. J. Hurst VK5HI.
VK6 — Mr. P. J. Savage VK6NCP.
VK7 — Mr. P. D. Frith VK7PF.

WIANEWS

AMATEUR ADVISORY COMMITTEE

Apart from WARC 79 and the Handbook, one of the many aspects of amateur radio currently being subjected to close scrutiny is the Amateur Advisory Committee Service.

In the pre-1939 era, when rigs were home constructed, operators generally prided themselves upon putting out good quality clean signals and recognised the need to observe the rules of good operating habits and procedures. The amateur service was self-regulatory; any poor quality signals or persistently sub-standards of operating behaviour were corrected by other amateurs in a friendly and co-operative spirit. Basically, the number of offences were very small because there were not many licensed amateurs. Anyone who ignored advice and became a habitual offender deserved everything coming to him if his licence was suspended or cancelled by the Administration.

After World War 2 the numbers of amateurs increased, especially from the ranks of Servicemen exposed to radio during the war. In this period the Amateur Advisory Committee emerged as a buffer between officialdom and amateurs. Nevertheless, the on-air practice of friendly advice to those amateurs putting out poor quality signals, etc., continued. Has this practice since fallen into disfavour because of the Advisory Committee being in existence?

In recent years there has been another great influx into the amateur ranks, this time of CB and other operators, coupled with the introduction of the Novice licence. Probably the great majority of newcomers genuinely take steps to learn what amateur radio is all about and genuinely make every effort to conform. However, in any human society, there does exist an element of non-conformity, and the point is that if there were only a handful of these people in the amateur service of years gone by, today there must be 5 or 6 times as many because of the increase in numbers of licensed amateurs.

Without any Amateur Advisory Committee, offenders would find themselves having to answer "please explain" letters direct from the official spectrum policeman — the P. and T. Department. It is reasonable to suppose that a persistent offender would soon receive stronger citations until sooner or later stern disciplinary measures would be taken. It is to the Departmental officers' credit that serious measures have been few and usually only after everything else has failed.

The question being asked today is whether we as amateurs can self-regulate ourselves so as to avoid the need for official citations. Not because we wish to reduce Departmental work but because we recognise the benefits flowing from taking care of ourselves and safeguarding our hard-earned privileges. After all, the USA, the UK and other countries get along without Advisory Committees as such.

In some States, Amateur Advisory Committees fell into abeyance due to Departmental staff and other difficulties. Did the amateurs in those States suffer any harm from direct exposure to "the policeman"? And the questions mount up.

EXAMINATIONS

There was a meeting of the Joint WIA-Departmental Committee on 22nd August at which a number of subjects were discussed. It appears that having introduced multi-choice examination questions the Department intends to review the examinations area of their work. Nobody can forecast what the outcome will be in terms of more frequent exams, increases in fees and general streamlining of procedures. It appears that the Departmental attitude to the issue of licences to visitors has toughened as the result of recent occurrences. No longer will photocopies of home licences be accepted and visitors will have to prove their bona fides. This hardening of attitude will also flow into the field of reciprocal licensing affecting intending residents. Reduced licence fees for pensioners is a subject still with the Minister despite agreement as long ago as 1976 — please see WIANEWS in AR for December 1976. Conditions for the installation and management of repeaters at long last appear to be resolved — negotiations on this subject have been going on for several years — please see WIANEWS in AR March and April 1976.

SUBSCRIPTIONS

At the Executive Meeting on 14th August there was a long discussion about the level of the Federal part of subscriptions in 1980. The level has been unchanged for three years mainly due to the rise in membership exceeding the ravages of inflation on expenses. These inflationary trends will soon eat away our slender reserves unless something is done about it, especially as economies are already stretched to the limit. It was found that the expenses in producing AR had risen dramatically this year. This was not apparent at the time of the Federal Convention.

FEDERAL QSL

Approval was given for the appointment of Neil Penfold VK6NE to take over the Federal QSL Manager's work, being relinquished after some 30 years by Ray Jones VK3RJ. The 1979 Federal Convention had recorded a sincere vote of thanks to Ray for his great many years of service to WIA affairs.

GENERAL

Also approved was the composition of the Federal RTTY Committee, consisting of VK2ABH, VK2AOE and VK2BVJ. Another post to be filled later in the year is that of Federal Intruder Watch Co-ordinator on the retirement of Alf Chandler VK3LC. Hopefully a volunteer, possibly from VK4, will come forward to assist. Taking over the management of the Westlakes Novice Contest awaits comments from the Federal Contests Manager. Keith Malcolm VK3ZYK was confirmed in his appointment as chairman of the Federal VHF/UHF Advisory Committee in place of Peter Wolfenden VK3ZPA. This Committee would be discussing a band plan for 6 metres with the Federal Repeater Sub-Committee. A suggestion that the WIA should re-introduce the sale of a WIA tie is to be investigated.

During August the 1979 WIA Australian Radio Amateur Call Book was received from the printers and was distributed. Early indications show that everybody appears to want one.

At the Publications Committee meeting on 7th August it was noted that, from the few comments received, the change of paper used in AR was favourably commented on mainly because it was less glossy than the previous grade. It was also noted that problems in postal distribution caused delays in receipt of the July issue in particular.

WARC 79 DONATIONS

The Executive wishes to acknowledge with grateful thanks the receipt of the following donations from members —

LIST No. 6

Western Suburbs RC (per VK3NGN)	*$20.00*
VK3XY	*25.00*
L50355	*6.25*
VK2AY	*5.00*
Sunshine Coast ARC (per VK4ARC)	*50.00*
L30574	*10.00*
VK3UE net (per VK4ZB)	*40.00*
Ex List 2 — VK2ARP	*5.00*
VK2NJK	*10.00*
VK6YE	*10.00*
VK3ABH	*20.00*
VK4IW	*20.00*
VK4 Division — Sales proceeds	*180.00*

■

ADVERTISERS' DONATIONS TO WARC '79

The Federal President wishes to extend grateful thanks to our advertisers for generous donations towards the expenses of WARC representation

MARCH 1979	$
Dick Smith Electronics	500
Vicom International	1000
Bail Electronics	500
Chirnside Electronics	100
Scalar Industries	50
Elmeasco Instruments	25

These are entitled to the use of the WIA emblem and the words: "WARC Amateur Supporter" in their advertising displays.

SC22DX

Scalar's Great New 5 Band Vertical

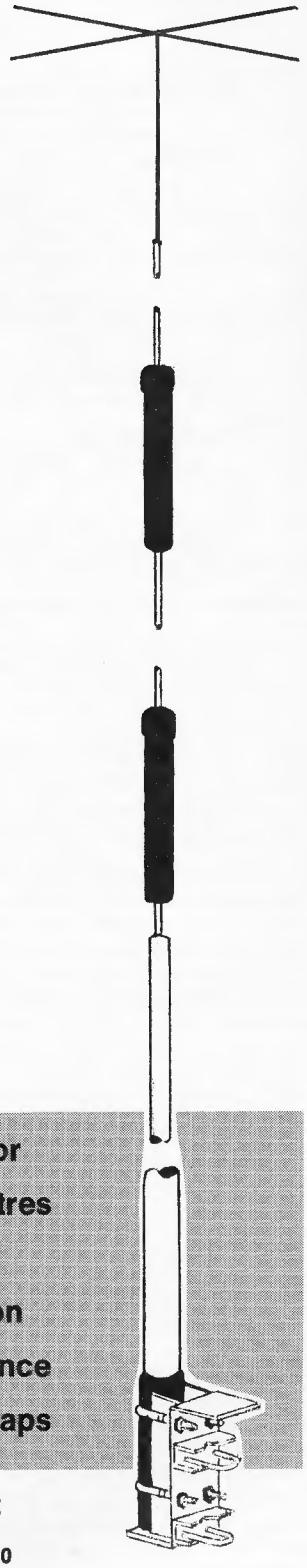

FEATURES:

★ ¼ wave operation for
★ 10, 15, 20, 40, 80 metres
★ self supporting
★ low angle of radiation
★ for top DX performance
★ high Q resonant traps

"A QUALITY AUSTRALIAN MADE PRODUCT"
Recommended Retail Only $129.00

CONTACT YOUR LOCAL HAM GEAR RETAILER OR THE MANUFACTURERS...

SCALAR INDUSTRIES PTY. LTD.
20 Shelley Avenue, Kilsyth, Vic. 3137 (03) 725 9677
N.S.W.: 20 The Strand, Penshurst, 2222 (02) 570 1788
QLD.: 969 Ann St., Fortitude Valley, 4006 (07) 52 2594

I have recently returned from a two-month trip to EUROPE and seen many interesting things, directly and indirectly related to amateur radio. As a result I have decided to start early next year with some new things, computer related equipment and new brands of receivers, transceivers and accessories.

Meanwhile I plan to clear my present stock of equipment to make room for what is to come next year. Consequently there will be even more bargains to be had than before. Many items are already being sold below replacement cost, just check earlier advertisements for prices or send a 9 in. x 4 in. SAE for the latest price list. There will be particular bargains for novices in 10 metre transceivers, accessories, etc.

ARIE BLES VK2AVA

SIDEBAND ELECTRONICS IMPORTS

P.O. BOX 23
SPRINGWOOD, N.S.W. 2777

Warehouse:
78 Chapman Pde., Faulconbridge

TELEPHONE: (047) 51-1394
A.H. (047) 54-1392

AT LAST!

THE TYPE 610 BRITISH POST OFFICE designed MORSE CODE KEY

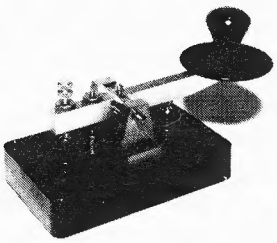

There has never been a better designed Morse Code Key — SOLID, ROBUST and BEAUTIFULLY BALANCED.

$26.50 (Post Paid)

"LEARNING THE MORSE CODE" — Cassette Album Training Course. You will progress rapidly using this modern training system.

PRICE $20 (Per Album of 3 Cassettes)

WILLIAM **WILLIS** & Co. Pty. Ltd.
77 CANTERBURY ROAD, CANTERBURY, VIC. 3216
PHONE 836 0707

A Call to all holders of a

NOVICE LICENCE

Now you have joined the ranks of Amateur Radio, why not extend your activities?

THE WIRELESS INSTITUTE OF AUSTRALIA
(N.S.W. DIVISION)

conducts a Bridging Correspondence Course for the AOCP and LAOCP Examinations.

Throughout the Course, your papers are checked and commented upon to lead you to a SUCCESSFUL CONCLUSION.

For further details write to:

THE COURSE SUPERVISOR, W.I.A.

P.O. BOX 123,
ST. LEONARDS, N.S.W. 2065

HAM RADIO SUPPLIERS
323 ELIZABETH STREET, MELBOURNE. PHONE 428 8136

WE STOCK:—

Radio Tubes — Condensers — Crow — Switches — Resistors — Speaker Wire — 50 x 72 CX Cable — ex Army Test Gear — CB Power Supply — Disposal Receiver Valves — Radio Chassis — Pots — TV Parts — ex Army Tx and Receivers — Microphones — Speakers — Tuners — Meters — Transformers — PSU Kits — Mike Leads — Speaker Cloth — Solder Eater — Plugs — Sockets — Log Books — Recording Tape — Tape Recorders — Walkie Talkies — Multimeters — Diodes — Electronic Components

and many other items — too numerous to list here.

HAM RADIO DISPOSALS STORE
104 HIGHETT STREET, RICHMOND
TELEPHONE 428 8136

SSB TRANSMITTER FOR THE 13 cm BAND

Reg V. Galle VK5QR
5 Turnbull Rd., Enfield, SA 5085

EXPERIMENTAL VERSION USING ENVELOPE ELIMINATION AND RESTORATION

(Note: This is a translation by AR staff, with permission, of an article originally published in German in UKW-BERICHTE 4/1978, based on material submitted to them by VK5QR. As the English version (VHF Communications) may not appear for some time, it is hoped this version may expedite use of the technique by VK amateurs.)

The technique of SSB signal generation by the method of envelope elimination and restoration has been suggested to VHF amateurs in Ref. 1. Dr. Karl Meinzer DJ4ZC has developed the necessary adapter, using a frequency divider, which allows a final frequency multiplication into the desired UHF or SHF band. This can be achieved by use of the usual varactor multipliers (Ref. 2). The author employed the method in an SSB transmitter for the 13 cm band, and was able to produce by this means a 4W SSB signal on 2304 MHz. This was sufficient to make contact on 17th February, 1977, with VK6WG under mid-summer duct conditions over the 1885 km path from Adelaide to Albany. Naturally it was not the conversion process which made this incredible distance possible, but there is unlikely to be a simpler method of achieving SSB signals of usable power in the microwave spectrum. It seems therefore that the technique should be more widely known, so the transmitter used will be described. It is emphasised that since the equipment described is experimental no attempt will be made to provide complete constructional information. The main details will be presented and discussed; some photographs which were helpfully provided by R. T. Manual VK5RT give an impression of the author's prototype version.

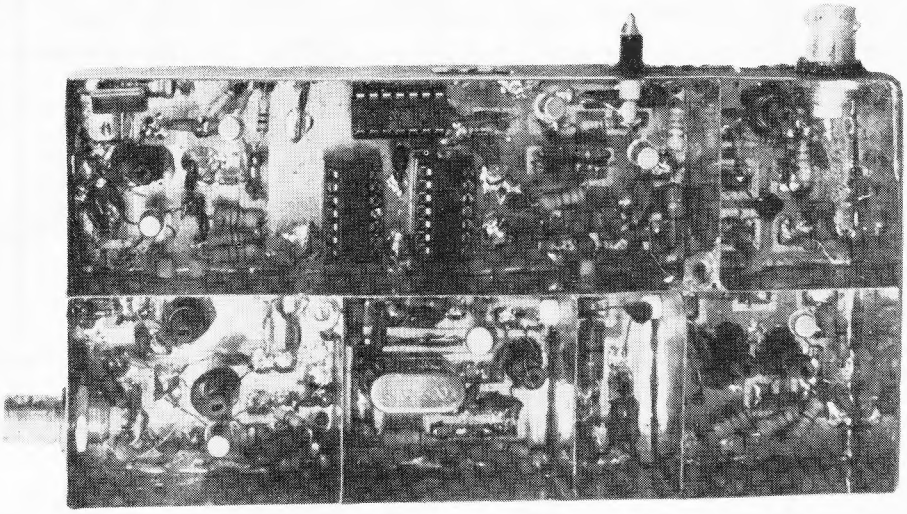

2.3 GHz Processor.

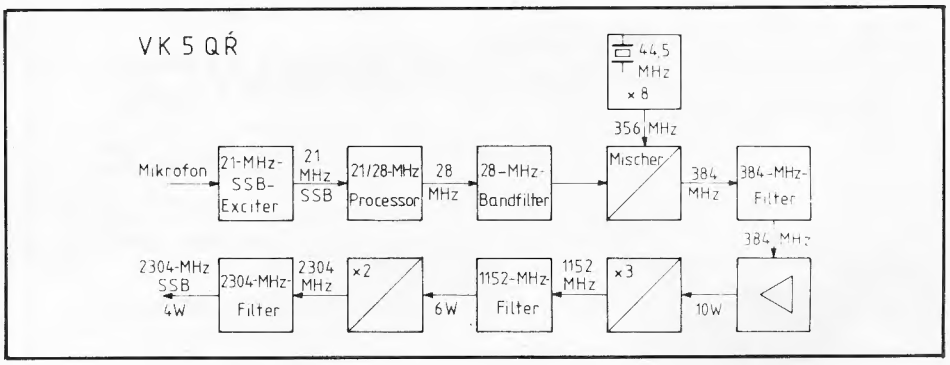

FIGURE 1: SSB transmitter for the 13 cm band using envelope elimination and restoration.

1. BLOCK DIAGRAM

The block diagram in Fig. 1 shows the stages and filter arrangement. A KWM-2 or FT-101B on 21 MHz is used as the SSB exciter. The vital element of the system, the processor, will be described in detail in Section 2. The frequency of the following crystal oscillators is chosen so that after multiplying by 6 the frequency of 2304 MHz in the 13 cm band is achieved. Linear power amplification takes place at 384 MHz, at which frequency this poses no problem. For example, one might use the amplifier described by G. Freytag DJ3SC in Ref. 3. The output power is solely dependent on the capability of the following frequency multipliers. For tripling from 384 to 1152 MHz one may use the varactor tripler MMV1296 available from Microwave Modules. It is only necessary to re-tune it to the lower frequency, at which it can produce 10W output at 1152 MHz from a maximum of 20W.

The following doubler, from 1152 to 2304 MHz, will be described in greater detail in Section 3, since in this area there is more scope for individual variations. The band-filters preceding and between the frequency multipliers are extremely important to ensure that only the desired single frequency drives each multiplier.

Finally, it may be mentioned that the DJ6ZZ 006 unit (Ref. 4) was used as the transverter from 28 to 384 MHz, and an interdigital output filter (Ref. 5) was used in the receiving converter.

2. THE PROCESSOR

The theoretical basis of the technique is covered extensively in Refs. 1 and 2. Here, it is sufficient to say only that the incoming 21 MHz SSB signal is split into its AM

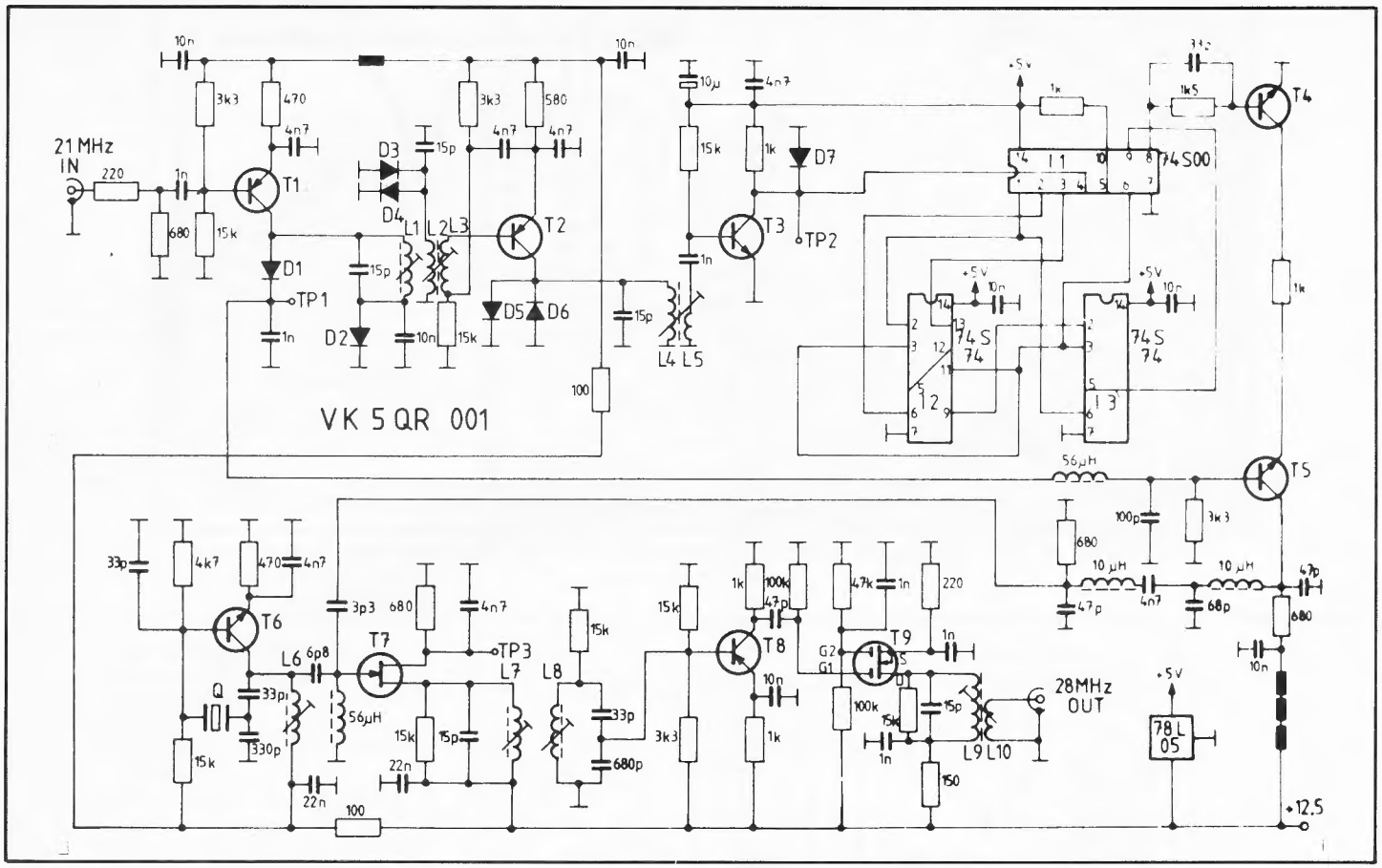

FIGURE 2: The 21/28 MHz SSB processor using division by 6.

(envelope) and PM (FM) components. These two components are then further processed separately. The PM signal is divided by 6, whence the resulting frequency of 3.5 MHz has only one-sixth of the original deviation. This signal is then amplitude-modulated by the separately-amplified envelope signal, and finally mixed with a crystal-oscillator frequency of 31.5 MHz to produce 28 MHz. After this the new SSB signal, now containing only 1/6 of the deviation, is selectively amplified to a level suitable for the next stage.

Fig. 2 shows the processor circuit. The 21 MHz SSB signal (any chosen frequency between 21 and 21.5 MHz) is of the order of 100 mV at the input, where it is amplified by transistor T_1 to around 5V. An envelope detector using diode d_2 separates out the AM component, the resulting low-frequency signal being fed to the audio amplifier T_5, which then modulates the PM signal in the stage T_4. The diode D_1 provides bias for transistor T_6.

The signal amplified by T_1 is also fed via the bandpass filter (L_1, L_2) to a first limiter (D_3, D_4). After more amplification (T_2) and limiting (D_5, D_6) the 21 MHz PM signal arrives at a pulse-forming stage (T_3). The square-wave signal is now divided by 6. Although at an input frequency of 21 MHz standard TTL devices should be adequate, the author preferred to be sure and used Schottky TTLs.

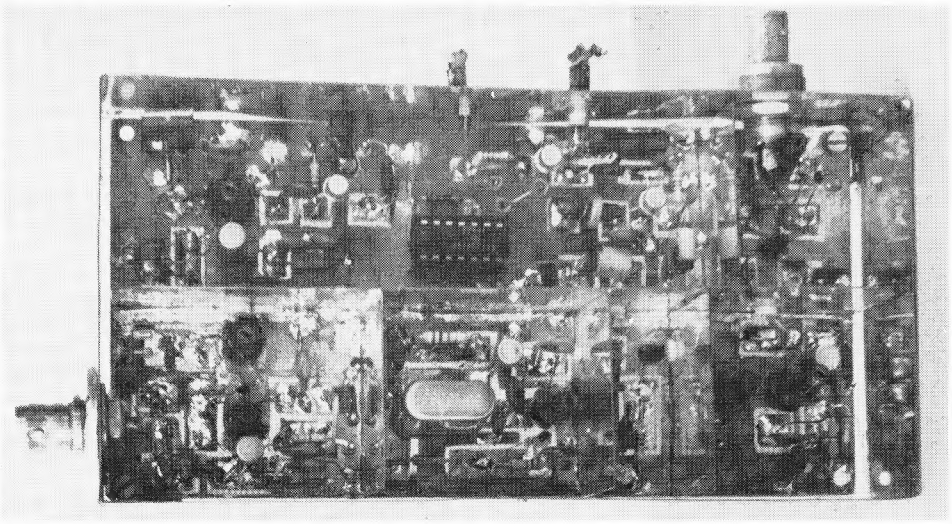

1.3 GHz Processor.

Transistor T_4 works as an electronic switch, which is controlled by the 3.5 MHz square-wave. The current through T_4 controls the audio voltage at the base of T_5, so that the 3.5 MHz signal is re-modulated by the envelope.

The composite signal is now fed through a low-pass filter to suppress the 6th harmonic, and then to the mixer stage using an FET (T_7). The crystal oscillator T_6 delivers a frequency of 31.503 MHz, so that the difference frequency 28.083 to 28.0 MHz passed by the filter (L_7, L_8) can then be amplified in the last two stages.

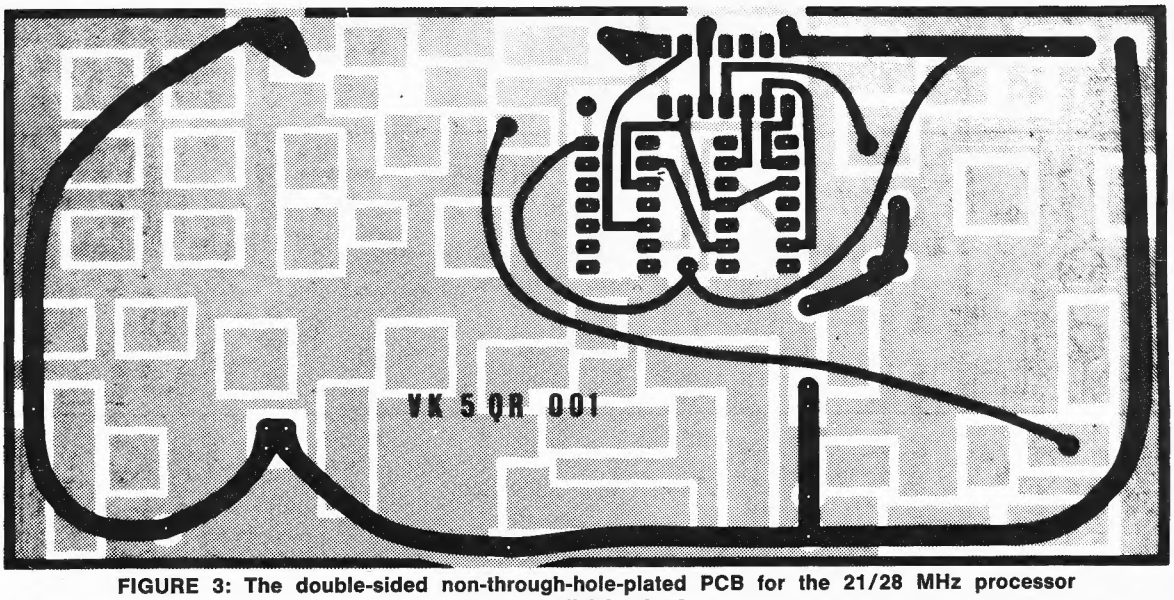

FIGURE 3: The double-sided non-through-hole-plated PCB for the 21/28 MHz processor using division by 6.

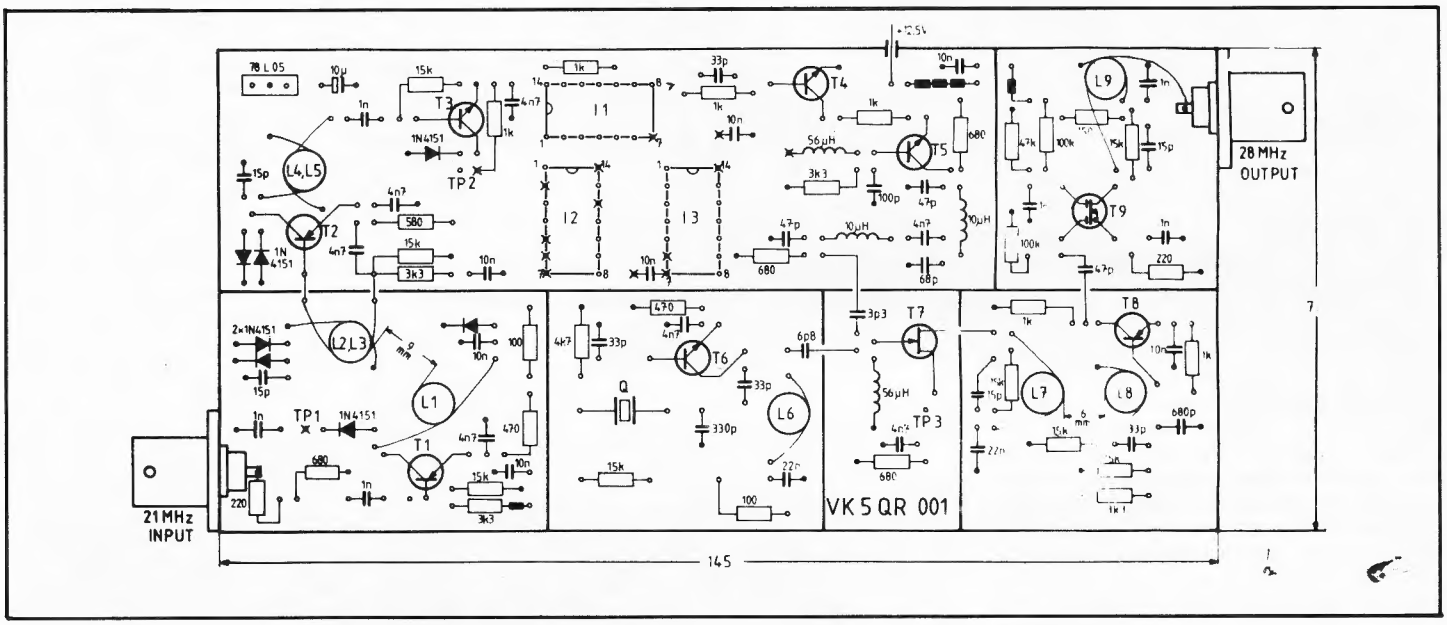

FIGURE 4: Component mounting diagram for the processor PCB VK5QR 001.

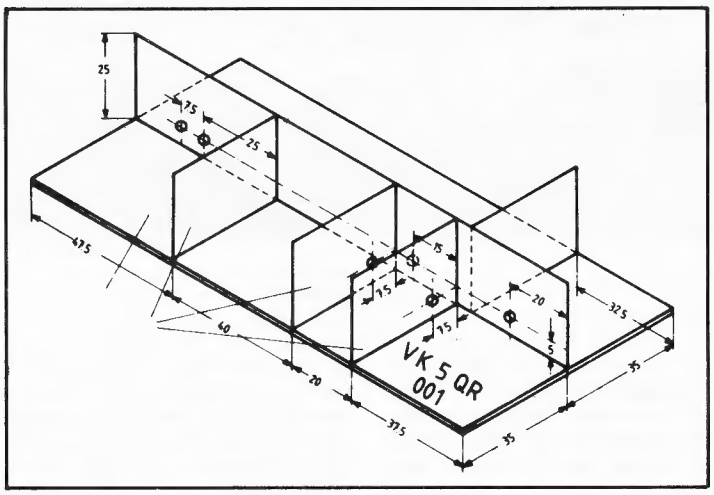

FIGURE 5: Mechanical construction details of the processor.

2.1. COMPONENTS FOR THE PROCESSOR

T_1, T_2, T_3 — RS2003 (Japan), AF106, AF127 or other Ge PNP HF transistor.

$T_3 \ldots T_5$ — 2N706 or similar Si NPN VHF transistor.

T_6 — BF173, BF224, BF199 or simliar VHF transistor.

T_7 — MPF102, BF245 or similar FET.

T_9 — MPF121, 40673, 40841 or similar dual-gate MOSFET.

D_1, $D_3 \ldots D_7$ — 1N914, 1N4148 or similar Si planar switching diode.

D_2 — AA112, AA118 or similar Ge diode.

All coils on 6 mm formers with HF slugs, using 0.4 mm (26 AWG) enamelled wire.

L_1 — 20 turns.

L_2 — 22 turns. Formers spaced 15 mm between centres.

L_3 — 4 turns wound over L_2.
L_4 — 22 turns.
L_5 — 4 turns wound over L_4.
L_6 — 15 turns.
L_7, L_8 — 22 turns each 12 mm spacing between formers.
L_9 — 22 turns.
L_{10} — 3 turns wound over L_9.

2.2. CONSTRUCTIONAL DETAILS

For the processor of Fig. 2 a printed circuit was developed as shown in Fig. 3. It is 145 mm x 70 mm in size and is double-sided. The few through connections necessary are effected during component mounting by soldering top and bottom; these points are designated in the diagram (Fig. 4) by small crosses. Leakage of any original SSB signals into the output must be completely prevented by shielding of the whole processor and its individual stages from each other. To achieve this the board is divided into 6 compartments (Fig. 5) using shielding plates, and the assembly is then soldered into a tight-fitting housing. This is carried out as follows:

The side of the board with the greatest area of copper will be designated as the top or component side. The underside is therefore that with relatively few conductor tracks. All mounting holes are to be drilled from the underside.

The shielding plates are cut out as in Fig. 5, the holes in them are drilled as shown, and the plates are then soldered to the component side of the board. The coils can now be wound (as in Section 2.1), and lightly fixed with quick-setting glue. Before permanent fixing with epoxy cement the specified distances must finally be checked.

The components can now be installed for the input amplifier, limiter, and frequency divider, supply voltage connected, and a 21 MHz signal fed in. Following a rough alignment of the coils, the functioning of the divider is checked either with a receiver or a counter.

The remaining components can now be fitted.

After this, the unit is enclosed in a tin box fitted with BNC connectors and voltage feed-throughs. Then final alignment follows.

2.3. ALIGNMENT OF PROCESSOR

It is important to provide a constant input level at 21 MHz so that the limiter can function properly, thus providing a roughly constant voltage to the modulator. After adjustment of L_1, test points TP_1 should read not less than 5 volts nor more than 6, using an HF VTVM or equivalent.

Adjustment of the circuits L_2 and L_4, which are damped by the limiter diodes, can be effected with the VTVM at TP_2, using a temporarily-reduced input voltage such that barely usable indication is produced at a level below the diode limiter threshold.

With the VTVM at TP_3, the crystal oscillator is adjusted to oscillate, and checked for reliable self-starting.

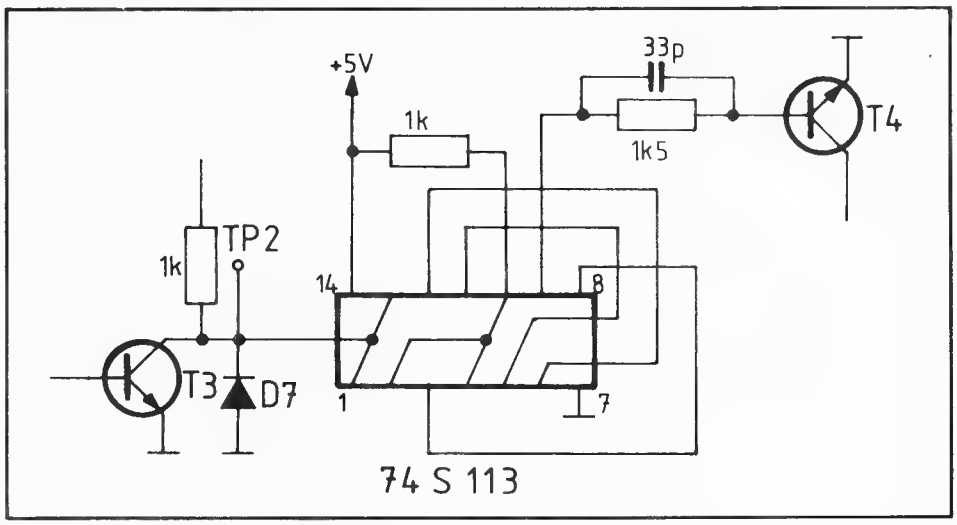

FIGURE 6: Divide by 3 circuit, replacing the divide by 6, if the processor is to be used on 23 cm.

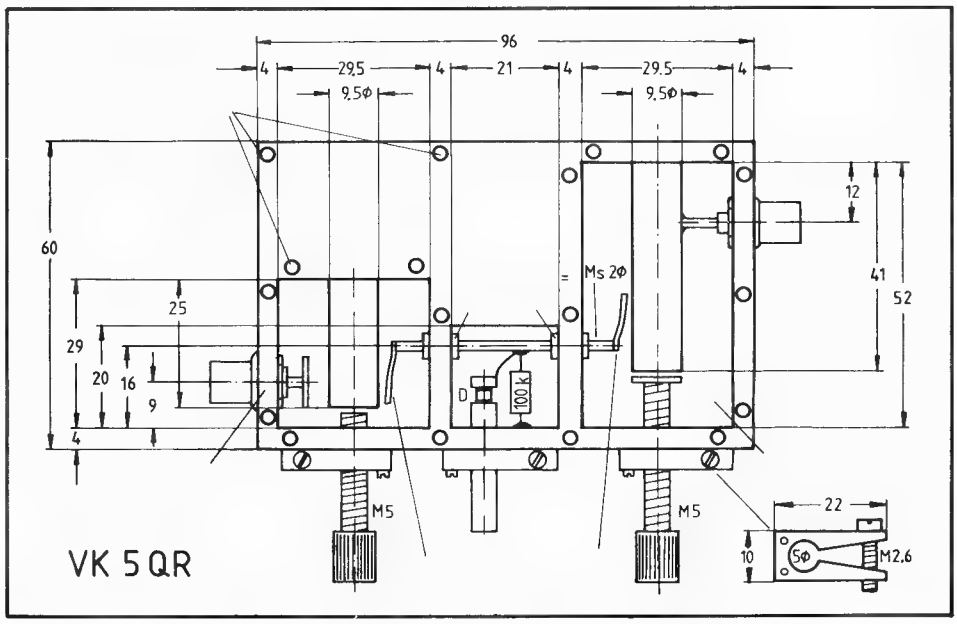

FIGURE 7: Practical frequency doubler from 1152 to 2304 MHz.

During final alignment of the mixer and output amplifier it is essential that these should not inadvertently be adjusted to the crystal frequency. After this the signal may be fed to the 384 MHz transverter.

3. A MODIFIED VERSION FOR THE 23 cm BAND

The principle and construction as described can be used with minor changes for the 23 cm band. Appropriate construction notes are as follows:

Obviously it is considered easier to achieve linear power amplification in the 70 cm band, and subsequently triple the frequency, than it is to amplify the 23 cm SSB signal directly.

The whole concept remains the same; only the frequencies must be altered as follows:

In the processor one divides by 3 instead of 6. The appropriate circuit as shown in Fig. 6 is inserted between T_8 and T_4 in Fig. 2.

The crystal oscillator is now on 35.166 MHz, so that mixed with the "intermediate frequency" of 7.0 to 7.166 MHz, output is produced from 28.166 to 28.0 MHz. There are no other component or coil changes needed.

In the following transverter mixing takes place with 404 MHz, producing the usual 70 cm frequency of 432 to 434 MHz. The power is then linearly amplified and a frequency tripler follows.

(On the appropriate request, a PCB layout for this version can be made available.)

4. DOUBLER 1152 TO 2304 MHz

The principal dimensions of this assembly are shown in Fig. 7. The cavity walls are

made of 4 mm sheet copper, top and bottom plates of 2 mm. The whole doubler fits into a cast aluminimum box of the type used by Microwave Modules. Although the author used BNC connectors, based on experience he would recommend using type N connectors at 2300 MHz.

Quarter-wave coaxial resonators are provided for input and output frequencies. They are connected together by a coupling line with 4 mm wide brass tabs used as coupling capacitors. This line passes through a third compartment containing a multiplier diode type VSE 66P (Mullard/Philips). The diode is mounted at one end to a heat-sink and the other end has a cap and attached strip connecting to the coupling line.

Whereas the input coupling at 1152 MHz is by metallic connection to a tapping point, the output coupling at 2304 MHz is capacitive, by means of a disc about 6 mm diameter soldered to the inner conductor of the connector. The coupling is adjusted to optimum by screwing the connector in or out.

The author would be glad if others adopting this method of microwave SSB generation could inform him of their experiences. He would also like to acknowledge the assistance given by Terry VK5GU in suggesting the dividing circuitry. The Editor would like to acknowledge the invaluable assistance of Mr. R. Maier with the German to English translation.

REFERENCES

1. Lentz, R. "SSB-Sender nach der Methode der Hullkurven-Elimination und Restoration." UKW-BERICHTE 11 (1971) Heft 3, Seite 165-170.
2. Meinzer, Dr. K. (DJ4ZC). "A New Method of Frequency Multiplication for VHF and UHF SSB." VHF COMMUNICATIONS, Vol. 3, E3.
3. Freytag, G. (DJ3SC). "Transistorised Linear Amplifier for 70 cm." VHF COMMUNICATIONS, Vol. 6, E1.
4. Weingartner, F. (DJ6ZZ). "A 28 MHz-432 MHz Transmitting Converter." VHF COMMUNICATIONS, Vol. 3, E2.
5. Dahms, J. "Fingerfilter-Konverter fur die Amateurbander im GHz-Bereich." UKW-BERICHTE 17 (1977) Heft 4, Seite 206-220.

■

A ROOF-RACK ANTENNA FOR HF

Rex Newsome VK4LR
58 Prospect Terrace, St. Lucia 4067

Some time ago I had a small imported car that did not seem rugged enough in either the front or the rear end to carry a decent HF whip. I decided, therefore, to try a Discontinuous Directional Ring Radiator (DDRR) in the form of a roof-rack. The results obtained from its limited use were sufficiently good to allow me to recommend it to others who might like to try a bit of inconspicuous mobiling.

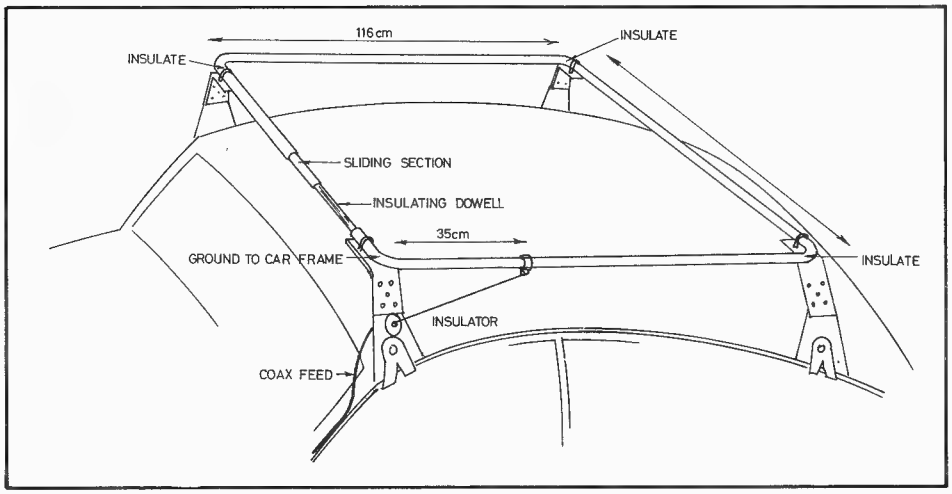

FIGURE 1: The installed antenna, showing dimensions.

Figure 1 gives the essential details and dimensions. The four roof-rack clamps used were made by Wilbroc and the curved aluminium pieces of tubing were swiped from a defunct camping chair.

The radiating element was insulated from the holding clamps by slipping a piece of large sized PVC garden hose over the aluminium tubing. According to design data for DDRR antennas the radiating element should be about 440 cm long for 14 MHz. However, it seems that the three insulated mountings provided capacitive loading that resulted in a considerable shortening. In my case the actual length was 411 cm. In the normal DDRR configuration a capacitor is inserted across the gap in the ring to tune the radiator to the desired frequency. In this case no capacitor was required and tuning was accomplished by sliding a smaller section of tubing into the end of the larger part of the loop. Adjustments were made with the aid of a GDO and self-tapping screws were inserted after adjustment to hold things firm. Matching proved to be a simple matter of a tapered feed extending from the support at the grounded end of the loop to a point 35 cm along the radiator. Again, no capacitor seemed necessary to cancel the stray inductances and a SWR of 1.5 : 1 was obtained over the 14 MHz band.

The initial try-out was on the day of the 1974 Field Day Contest. The first response to a CQ Field Day was a call from a YS1! It did appear that we were getting out at least, even if we were not immediately answered by another Field Day contestant.

While the dimensions given worked for my particular car (a Datsun 120Y), there is no guarantee that these will immediately suit another type. Variations in dimensions and clamping details will possibly alter the radiator length required. However the system is offered here as one alternative to the usual compromise provided by the helical whip. The DDRR is supposed to be theoretically identical to a full quarter-wave ground plane. While the car roof does not quite give the full extension specified for a DDRR ground disc, it appears to go close to filling the bill. The DDRR has an added advantage in that, with some adjustment of feeding arrangements, it should work on 21 and 28 MHz. Although no check was made on the latter two frequencies, I did try it on 144 MHz!

Whether is was sheer luck or something else is unknown, but the SWR was below 1.5 : 1 for the 2 metre band and a number of contacts were made using the DDRR. It also remains a moot point as to which part of the structure was doing the radiating, or what orientation and direction this radiation took. As yet, no measurements of directivity have been made, either on 144 or 14 MHz. ■

RIGID COAXIAL LINE

I. Berwick VK3ALZ
107 Loongana Avenue, Glenroy 3046

Conventional coaxial cable losses make the use of long runs of such cable unattractive for use at UHF. Most of the cable does not need to be flexible so the use of rigid "cable" or line is possible. This article describes a method of building low loss low cost rigid coaxial line.

The basic arrangement is shown in Fig. 1. A centre conductor of 3/16 in. copper wire and an outer conductor of ½ in. 16 gauge aluminium tube were selected to form a coaxial line because of their ready availability. The line impedance works out at 57.5 ohms, which is convenient. The copper wire may be purchased in rolls the same as fencing wire. It may be straightened by gentle hammering and stretching after cutting into 20 foot lengths. The aluminium tube may be purchased in 20 foot lengths.

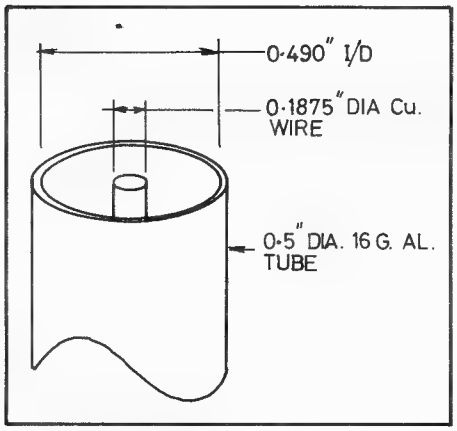

FIGURE 1: Basic arrangement of coaxial cable.

Fabrication of the line is described below. The inner assembly details are shown in Fig. 2. The spacers are turned from ½ in. teflon rod, drilled and cut off with a parting-off tool or hacksaw. They should be a push fit on the inner wire and a loose fit inside the outer tube.

The outer tube is connected to a coaxial connector as shown in Fig. 3. The termination block is pressed on to the end tube until this is flush with the block face and then clamped with a ¾ in. hose clamp over the slit.

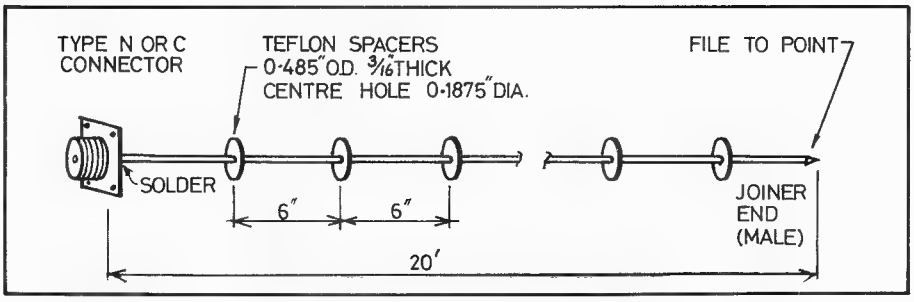

FIGURE 2: Inner assembly details.

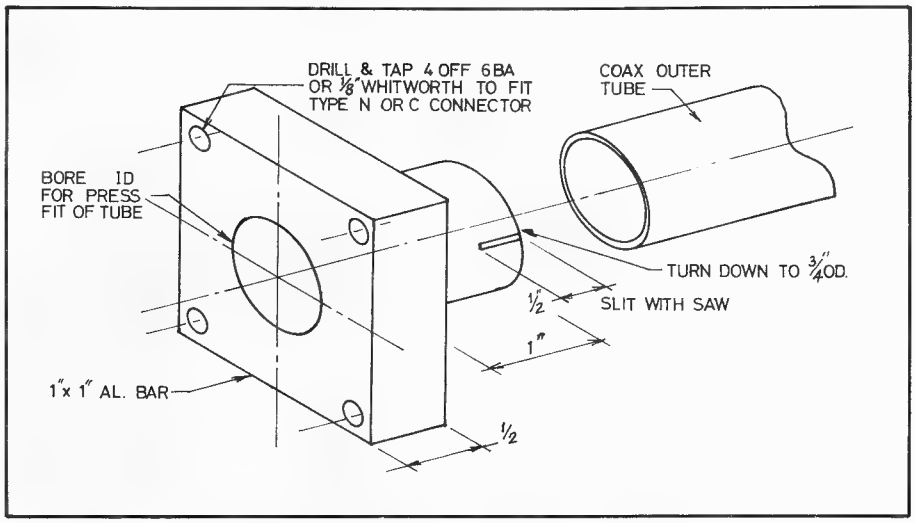

FIGURE 3: Outer assembly detail — connector end.

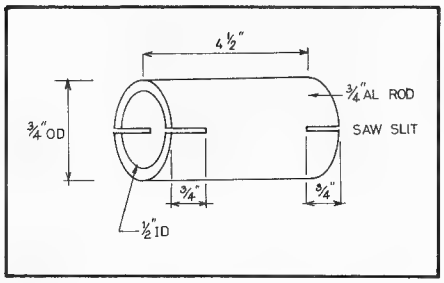

LEFT — FIGURE 4: Outer joiner sleeve.

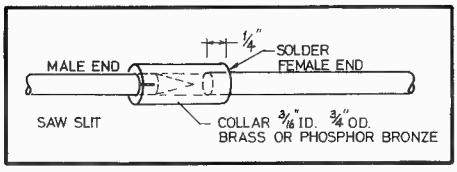

FIGURE 5: Inner joint.

Twenty foot lengths may be joined as follows. The outer tubes are butted together and the joiner, Fig. 4, clamped with two ¾ in. hose clamps. The inner conductor is joined as shown in Fig. 5. The two sections should firstly be completely assembled separately. The inner assembly is inserted into the outer, then the end connector is attached on to its mounting block with screws. The end clamp is fitted and tightened up and the joint sealed against entry of water. After fitting the two twenty foot lengths together a splint of two three foot lengths of 3/8 in. tubing taped to the centre joint will reduce strain on the joint and prevent a nasty accident during installation or service.

If the line is not run vertically, it should be supported as shown in Fig. 6.

The cost several years ago was 75 cents per foot. The loss at 432 MHz is less than ½ dB for the 40 foot length. The tube will now only be available in metric sizes so some adjustments will be required in the dimensions given. The impedance of the line, Z, can be calculated from the standard formulae $Z = 138 \log (D/d)$, where D is the inner diameter of the tube and d is the diameter of the wire. ■

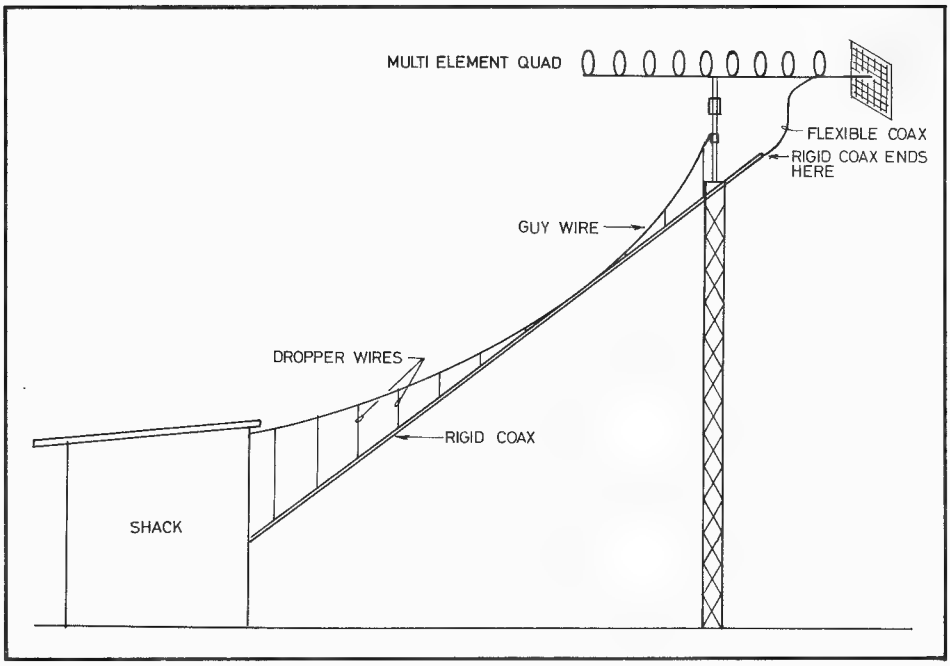

FIGURE 6: Support for rigid coax.

AN EMERGENCY LIGHT FOR THE SHACK

Ivan Huser VK5QV
9 Tallara Avenue, Mt. Gambier 5290

Have you ever been caught in the shack at the bottom of the garden on a dark and stormy night, when the power fails and you can't lay your hands on a torch? Then read on.

The system is shown in Fig. 1. When plugged into the mains, the three nickel-cadmium cells are placed on charge, the charging rate being set by R1 and indicated by the LED. In the prototype, R1 was 120 ohms, giving a charge rate of approximately 30 mA. Loss of mains voltage will allow the lamp to turn on. Restoration of mains voltage will automatically turn the lamp off and place the cells once again on charge. Emergency light is available for several hours from the "nicads".

There is a measure of built-in delay between the loss of mains voltage, and when the light is activated. This delay can be controlled within small limits by changing the value of the filter capacitor. Typical delay times are shown in Table 1.

The unit can be built into a "standard" flush light fitting mounted on the wall or ceiling, a hand lantern or whatever. A hand lantern has the advantage of portability, and will be most useful in getting you from the shack up into the house if the blackout is prolonged. All the components, including the three "D" size cells will fit comfortably in a "Dolphin" hand lantern. Connections to the supply can be made via a short lead or a suitable socket mounted on the rear of the torch. Note that the built-in switch of the torch must be left in the ON position. If a 9 volt "plugpack" power supply is available, then this could be used in place of the built-in power supply.

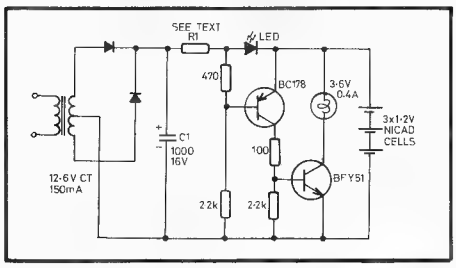

FIGURE 1: Circuit diagram.

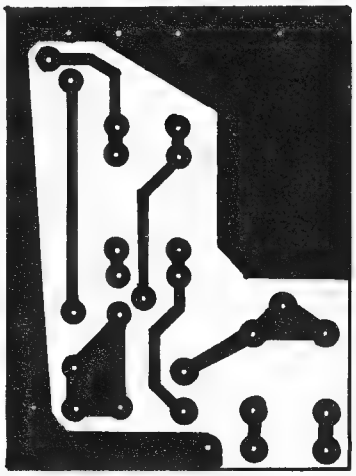

FIGURE 3: PCB layout (actual size), copper side.

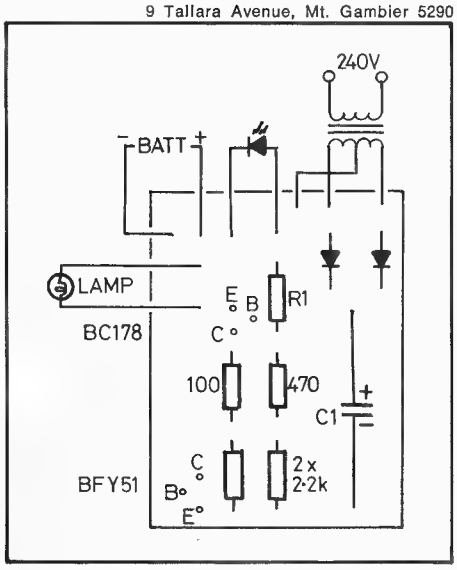

FIGURE 2: Component layout.

The PC board is simple and quite within the scope of those who use hand painted resist. A full size layout is reproduced as a guide.

TABLE 1

C1 (uF)	Delay time (sec.)
220	0.5
470	1.0
1000	2.0

■

DIAMOND IN THE SKY
(A SORT OF MULTI-BAND QUAD)

Rex Newsome VK4LR
58 Prospect Terrace, St. Lucia 4067

During a recent sojourn in G-land I had the opportunity and pleasure of visiting G6XN's antenna farm and of garnering a few ideas from Les as to how to go about exciting loops of wire to work as antennas on several bands. The present design was produced as a result of that visit.

While experiments are still being carried out, the results so far have been so encouraging that it was thought worth while reporting. Let me say at the outset, though, that the antenna, electrically, is due more to G6XN's know-how and experimenting than to any technical brilliance on my own part. The physical configuration described here, however, can be blamed directly on myself. In spite of the lack of visual aesthetics, the system may offer sufficient virtues and advantages for others to wish to try. It works as a rotatable directional array, albeit with some limitations in efficiency, on 40, 20, 15 and 10 metres. It is light, weighing about 3 kg from the rotator upward, and can easily be turned with a TV rotator. The turning circle is 11 ft. and, best of all from my point of view, it can be tuned entirely from the ground.

Basically it is a cubical quad system using two 12 ft. 6 in. square loops of wire each tuned by a closed stub about 45 ft. long. Given that the array is placed no higher than about 50 ft. the stubs fall within reach of terra firma, a condition that will be appreciated by all those who no longer have the ability to imitate our simian ancestors! Physically, the system is realised by arranging the loops around the corners of a cube formed by what initially appears to be a ground plane for 21 MHz (see Fig. 1). Three-quarter inch hard-drawn aluminium tubing was used for both the centre upright and the four radials. The centre upright was insulated from the rest of the structure at the base by a paxolin tube to break up the electrical mass of the support structure. The wire elements are held away from the structure by Estapol-coated dowelling jammed into the ends of the radial supporting tubes. Rather than bring the tops of the two element loops together a 3 ft. cross-tree of dowelling was fitted at the top with the aid of nylon cord down-

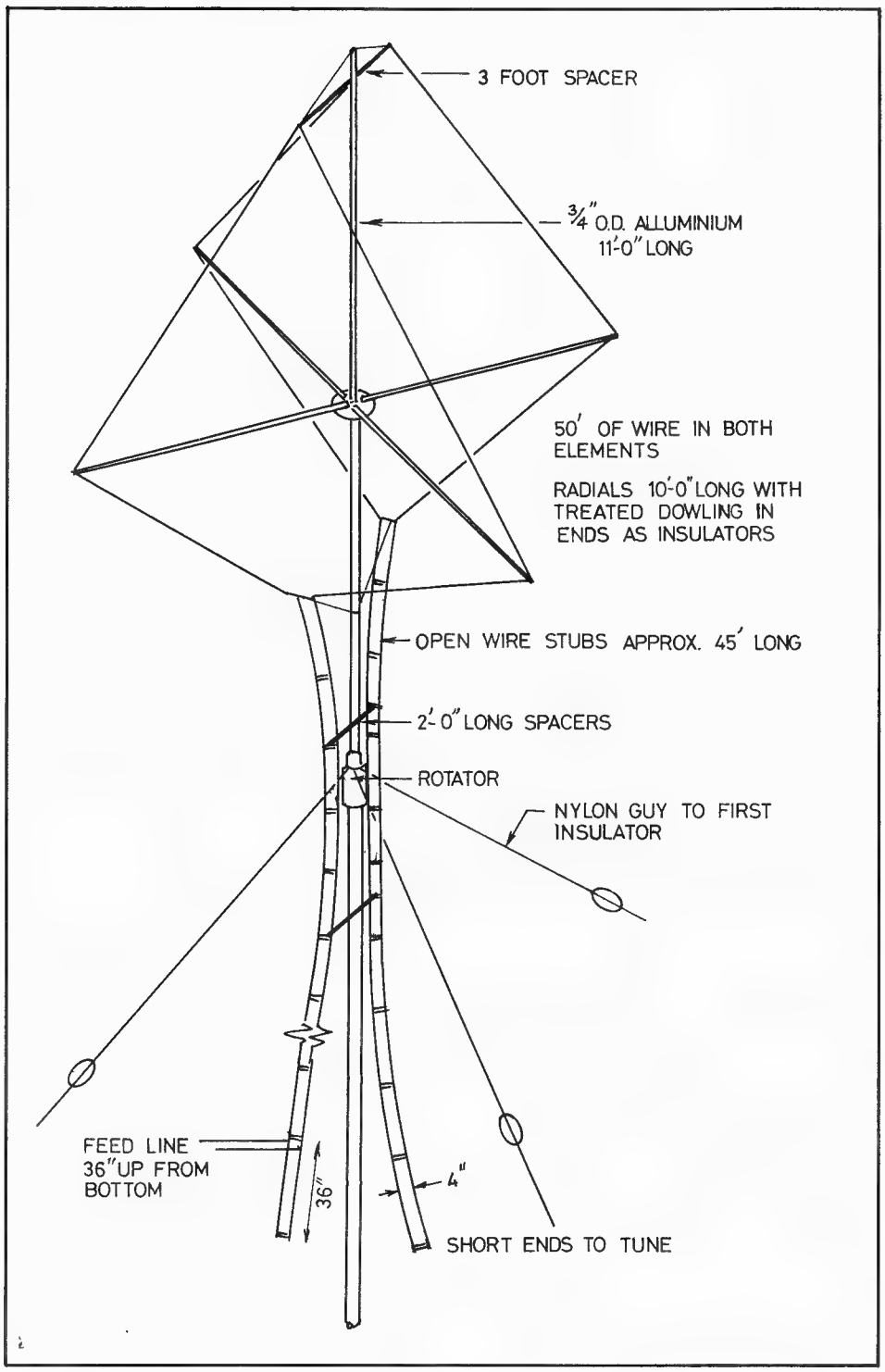

FIG. 1: The Sky Diamond.

bracing. While theoretically the two loops should be further apart, 3 ft. seemed to be a good compromise. Nylon cord was also used at the bottom of each loop to pull these in to about 3 ft. apart.

As the system is meant to rotate through 360° some arrangement had to be devised to allow the trailing stubs to turn with the elements without tangling or entwining with the mast and its guys. In practise this meant a twist of 180° in either direction. This was achieved successfully by the use of two dowelling standoffs, one attached to rotate freely at about 3 ft. below the loop-to-stub termination, and the other fixed to the mast 3 ft. below the other. If some slack is allowed in attaching the stubs it will be found that the array can twist through 180° without unduly affecting the stub tuning. Some form of standoff support is also needed to hold the remainder of the two stubs away from the tower, and possibly along the ground if the tower height is less than the length of either stub. Nylon rope was used in guying the mast for the first 4 ft. or so to avoid interactive effects between the guys and the stubs.

ERECTION AND TUNING

Erection can be done, and was done, single-handed, for all of the apparent size, the whole array is quite light and easy to balance. In fact, it can be held up in one hand (if no wind!). I used a 25 ft. length of 1½ in. OD aluminium tubing to loft the array skywards from the back balcony of my QTH.

With the array in place and the stubs tied down tuning was done by applying a GDO to the end of the stub in question just above the shorting bar. My initial aim was quite unambitious, simply that of making it work on 20. It turned out to be quite easy to find a position for the shorting bar to resonate on 14.2 MHz. Quickly checking for resonances on other bands I found that the driven element gave nice dips on 7.1, 21.4, and 28 MHz. Not bad! As I was anxious to feed some soup into the thing I improvised a 4 : 1 balun* out of two lengths of 73 ohm twin to take the end of a RG-8/U coax feedline to an impedance which I guessed to be suitable at about 3 ft. up from the shorted end of the stub. As it turned out, the position was just right and there was scarcely a flicker from the SWR meter in the reverse direction. A check on the higher bands showed that I was in luck, almost no returned power at 21.35 and 28.1 MHz. After a slight adjustment of stub tuning and alteration of loop dimensions a low SWR was obtained for all three bands.

The GDO was also used to tune the second loop as a reflector by application to its stub. Again, by adjusting the loop size slightly and the stub length a compromise position was found where the reflector resonated about 5 per cent lower in frequency for two of the three bands. A check with received signals indicated that a front-to-back ratio of about 8 to 10 dB could be obtained for 14.2 MHz and about 20 dB for 28.6 MHz. Fifteen metres was a different story. Due to the fact that the loop tuned high on this band the front-to-back was about —10 dB. In other words, the loop was acting as a director rather than a reflector. OK, so one just has to remember to reverse directions mentally from that indicated by the beam rotator when using the beam on 15!

No doubt a better compromise could be reached by adjustment of the various dimensions, but I chose to leave well alone.

While the principal aim of the exercise was to build an antenna which would work on 20, 15 and 10 metres, according to my reckoning it should work on 40 too, perhaps with some loss of efficiency! As it turned out, the loop plus stub arrangement did show a nice GDO dip on 7.1 MHz and a SWR of about 2.5 : 1 was indicated when RF was fed in. Again, no doubt a better SWR could have been obtained by adjustment, but as my interest in 40 was minor I thought it better not to disturb the good readings obtained for the other bands. More intrepid experimenters may like to improve on my results by further juggling the dimensions. As for 15 metres, the back-to-front for 40 turned out to be reversed. As far as I could tell the directional effect seemed to be weak, perhaps about only 5 dB. This could probably be improved also by further adjustment. Remember, though, that any adjustments affect all four bands.

How well did it work? Quite well in fact. While no comparisons could be made with a conventional beam, the impression was that it was not quite as good as the 3 element mono-band yagi used previously on 20. The virtues of this mini-quad, however, are obvious for those who are happy to sacrifice gain and efficiency.

*** A QUICK, MULTI-BAND BALUN**

A simple 1 : 1 balun for HF can be made by taking two lengths of 70 ohm twin of about a ¼ wave-length for the lowest frequency to be used, coiling both together into a bundle of about 6 in. diameter, taping, and joining the four wires at each end in accordance with the balun configuration. I have found that such a device works well to feed the end of coax to a balanced antenna for 20, 15 and 10 metres. In all probability ordinary figure-eight would serve just as well.

VK4LR ■

TEN COMMANDMENTS OF HUMAN RELATIONS

From Ham-Hum (Omaha NE).

Speak to people. There is nothing so nice as a cheerful word of greeting.

Smile at people. It takes 72 muscles to frown, only 14 to smile.

Call people by name. The sweetest music to anyone's ears is the sound of his own name.

Be friendly and helpful. If you would have a friend, be friends.

Be cordial. Speak and act as if everything you do is a genuine pleasure.

Be generous with praise — cautious with criticism.

Be considerate with the feelings of others.

There are usually three sides to a controversy: yours, the other fellow's and the right side.

Be alert to give service. What counts most in life is what we do for others.

Add to this a good sense of humour, a big dose of patience and a dash of humility, and you will be rewarded manyfold. ■

Photographs for AR

DON'T KEEP THEM TO YOURSELF

Send them in – NOW

WANTED

The Project ASERT Committee of the WIA is anxious to obtain a number of Rustrak miniature recorders, preferably having a range 0-1 mA and a chart speed of 5 cm/hour.

If any member or other person reading this advertisement is prepared to donate or sell a recorder of this type, the ASERT Committee would be most grateful.

Please have a look in your junk box and see what you can find; then either write to Box 150, Toorak, Vic. 3142, or telephone Les Janes (03) 338 9284 A.H.

A SIMPLE REGULATED POWER SUPPLY

Following on from the supply described recently (1), here is a design that may appeal to those who require a supply with a shut-down facility rather than the more often used current-limiting version. The decision to use shut-down may simply be personal preference or it may be a technical requirement.

K. Postler VK5KI
26 Hilltop Avenue, Ridgehaven 5097

The supply built by the author some months ago satisfied the need for a 12V, 1.5A unit requiring shut-down. Higher currents may, of course, be obtained by external pass transistors in the usual fashion.

The circuit of the supply is shown in Fig. 1 and follows the ideas put forward in the original article, i.e., keep it simple. As can be seen, the heart of the unit is the regulator IC, uA 723. The pin numbers in the circuit refer to the 10 pin metal can version (because it was on hand). There is no reason why you should not be using the 14 pin DIL version if you have them. (For pin numbers see reference (1).)

The basic information for the shut-down operation is given by the manufacturer of the device (2). I required an indication by way of an LED to signal that an overload had occurred. A simple push-button will reset the supply once the overload has been removed. My supply has pre-set output voltage. If you require adjustable output then substitute a potentiometer in place of VR1 and R2 (as per reference (1)). R1 limits the switch on surge to within the ratings of the diode bridge (30A peak). In the event of an overload, some power is dissipated in R6 and R7. This is done intentionally in order to prevent the voltage across C1 rising above its voltage rating. A capacitor with a higher voltage rating would have been too big physically. D1 is included to protect TR2 and IC1 in the event of the load generating a back EMF or other undesirable transient when the supply shuts down.

The SCR I have used comes from a packet of unmarked SCR devices sold by Tandy's. They are low power devices and look something like a BC108 transistor. I have tried several and they all work. You will need to adjust R8 to get satisfactory triggering, however, watch you don't reduce too much or you will exceed the gate current of the device (not at all desirable). I suggest if the thing does not trigger with

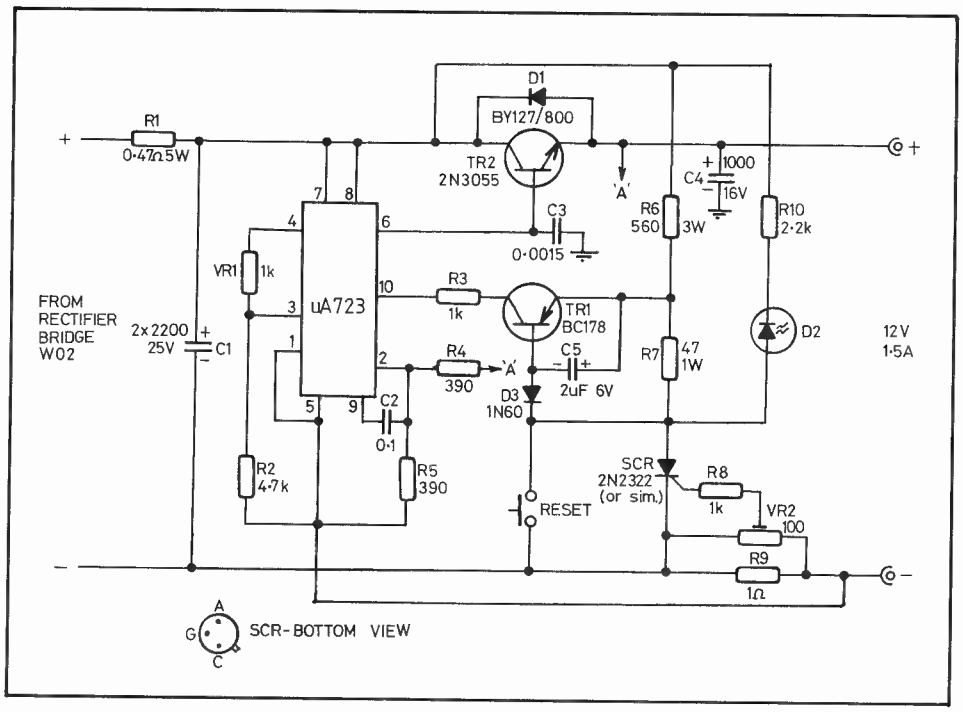

FIGURE 1: Circuit diagram.

R8 = 1k ohm, try another, or buy the one listed in the circuit diagram, if you don't feel like experimenting.

The construction is not at all critical. I have not given a PCB layout; you might feel like giving it a go. This might be a good project for "starters" in the art of making printed circuit boards.

Under conditions of capacitive loads the supply will cut out upon switch on although the current drawn is not anywhere near the limits of the supply. This is due to the surge as the external capacitors are trying to charge up. However, the action of the overload circuit is so fast that it shuts down before any charging-up can occur.

A small capacitor and a diode will need to be added to the circuit to "soften" the turn on action. These two components are shown as D3 and C5 in the circuit diagram Fig. 1.

REFERENCES:

(1) A simple, high current regulated power supply, B. H. Riley, Amateur Radio, November, 1977.
(2) Linear Integrated Circuits data catalogue, Fairchild Semiconductors, February, 1973. ■

Review: THE TONO THETA 7000 COMMUNICATION COMPUTER

By AR Editorial Staff

The TONO THETA 7000 Communications Computer (to give it the full title) is a highly sophisticated state of the art RTTY, ASCII and CW receiving and transmitting terminal, and projects the information on a normal television receiver or VDU monitor.

It is not often that we get the opportunity to look at the latest in amateur equipment as it actually hits the market, and we were grateful when we contacted VICOM that a unit was made readily available for a review.

The unit itself is very compact, measuring 400 mm x 300 mm x 120 mm and weighs 4.5 kg.

It incorporates many facilities including being able to be used as a terminal for an external microcomputer, and is not restricted to amateur communications. It can also be used for many types of commercial traffic.

The built-in RTTY demodulator has three shifts; 170 Hz for normal amateur use, also 425 Hz and 850 Hz, making it a very versatile unit in this mode. FSK or AFSK may be used.

Character speeds of 45.45, 50, 56.88 and 74 baud are available at the push of a button, and in the ASCII mode speeds of 110 and 300 baud are selectable.

The unit has several reasonably large capacity memories, including a buffer memory with recall.

CW sending and receiving is also fully automatic, with adjustable speeds and weight for varying character ratios.

The control panel is a modern typewriter keyboard and is silent in use.

We tested the unit basically from an operator's point of view, and did not delve into the circuitry with any depth.

Suffice to say that it is fully solid state, with a Central Processing Unit, and naturally due to its complexity, would not lend itself to "fiddling" by over-enthusiastic experimenters.

One would have to consider that providing the unit was operated in accordance with the instructions, and the "works" be left alone, many years of excellent service would be obtained.

The unit comes with a fairly comprehensive instruction manual, and even a limited service manual for various adjustments.

Both manuals are written in the typical pseudo English from Japanese translation we are now becoming used to, and it is necessary to read over some of the sections several times to obtain a thorough understanding.

ON-AIR TESTING

On-air tests were restricted to the RTTY and CW modes, we did not encounter any ASCII transmissions during the tests, so we were unable to fully appreciate that mode.

It is very easy to be over critical with a device such as this, and after a period of becoming fully conversant with its capabilities, we found it a delight and relatively simple to operate.

RTTY

It certainly helps if the operator has some form of typing capability, but the testers were only "two finger" typists, and even though we were slow at first, we had no trouble in keeping up with some of the more experienced operators in our QSOs.

We generally found that signals less than S3 provided a marginal copy only, in both RTTY and CW. It was interesting to note that on occasions where the "woodpecker" was evident, or with QRM from SSB and some CW stations, the display was not affected.

The automatic carriage return and letters and figures shift means that the operator does not have to concern himself with "running off the page" or typing "asterisks", etc., in place of numbers. It is all done for you, and helps to speed up transmission.

The memory functions are *very* useful, and permanent short messages such as call signs, basic details, etc., may be stored for instant recall.

CW

The signal to noise ratio on most bands produced excellent CW copy from keyers.

The easy way to copy CW at virtually any speed.

Hand sent CW is often not optimally spaced, and the unit produced some odd characters if a station operator was inconsistent, e.g., "HI" was often displayed as "HEE".

Some noise bursts, particularly on 80 metres, produced a string of "Es", but after a while one became used to this, and it was amazing how quickly we were able to mentally correct what was being displayed.

It is obvious that the unit performs its best on receiving keyer sent code.

In monitoring two or more stations on CW we found it necessary for all stations to be zero beat, or within 100 Hz of each other, to save returning the receiver. This is actually quite an important facility, as it proves the effectiveness of the filters by rejecting QRM as mentioned earlier.

SUMMARY

The general consensus of the testers was that the TONO Corporation has produced a very effective and efficient terminal. It is a new generation of amateur equipment and should prove itself popular with amateurs and commercial users.

The unit performed to its specifications and, after spending several hours to become fully accustomed to its capabilities, we found very little to criticise.

We found it relaxing to use and were grateful for the help and understanding given by the other amateurs we contacted.

The TONO THETA 7000 is the ideal unit for the RTTY enthusiast who detests noisy teletypes and who would also like to work some CW, or for the CW fiend who would like to try RTTY.

It is not particularly cheap, although very competitively priced to other similar units. At the time of testing the price is $839, and is available from VICOM and their distributors. ■

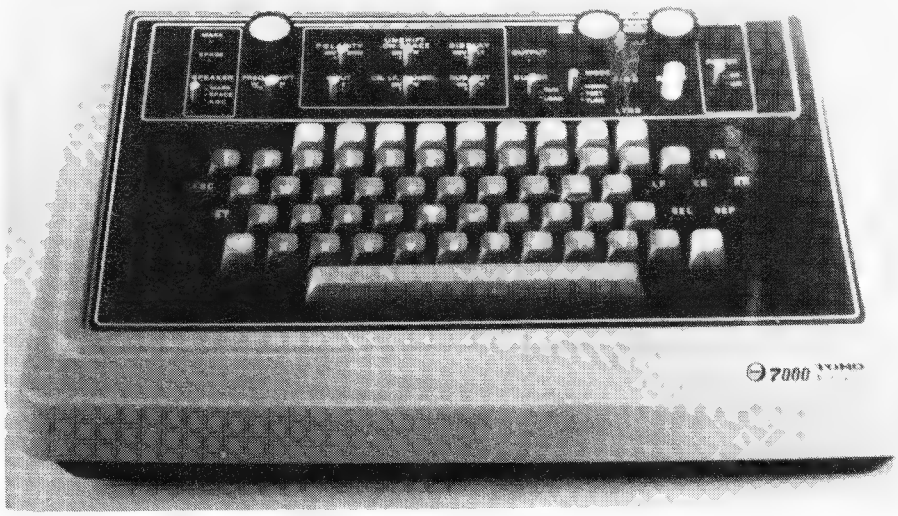

24 HOUR CLOCK

By G. Sones VK3AUI
30 Moore Street, Box Hill South 3128

Contacts should always be logged in UTC, or GMT as this gives a universal basis of comparison rather than in local time. Local time may not mean anything to someone in another country and could result in a card being returned as the log entry could not be found.

An easy way of keeping the log is to have a 24 hour clock running in UTC. This can be set to WWV and will then enable you to have a log using UTC.

However a snag arises in that 24 hour clocks are not available over the counter in every shop. All is not lost though as most electronic clock integrated circuits provide a 24 hour option.

The DC operated digital clocks are initially very attractive but unfortunately most of them use a colour TV crystal from the USA. These are very cheap as they are mass produced and so is an integrated circuit divider to bring this down to a suitable input for the clock circuit. However the frequency of this crystal is 3.579545 MHz. This is rather unfortunate as it places a rather large birdie in several amateur bands.

A better alternative is the mains operated clocks which use the AC mains. The AC mains hold frequency very well and for a clock are quite adequate.

An AC mains type 24 Clock Module has recently been advertised by Dick Smith at the extremely attractive price of $6.90. All you need with this module is a transformer, some switches and a case. The module is a 24 hour unit and is actually a unit designed for use in a clock radio. As a result of this an alarm driving output is available. The module is type MA1008. Similar modules are the MA1002 series.

Suitable transformers, switches, buzzers and cases are also available. These parts may be used in the clock described.

A word of caution is in order before you start though. These modules use an MOS integrated circuit and several of the inputs are of necessity brought out to connect to switches. When soldering the module into circuit the module should be grounded by attaching a clip lead to the power supply section of the circuit board. The electrolytic capacitor leads are very convenient. The soldering iron should also be earthed as also should any tools and also yourself. Quite high resistance earthing is satisfactory and you may discharge your static charge by touching any of the earthed objects.

In spite of all these problems with MOS the author was able to solder and unsolder the circuitry several times without any trouble. The reason for this was that the first lashup was outside the case and then when in the case a few wrong connections had to be sorted out.

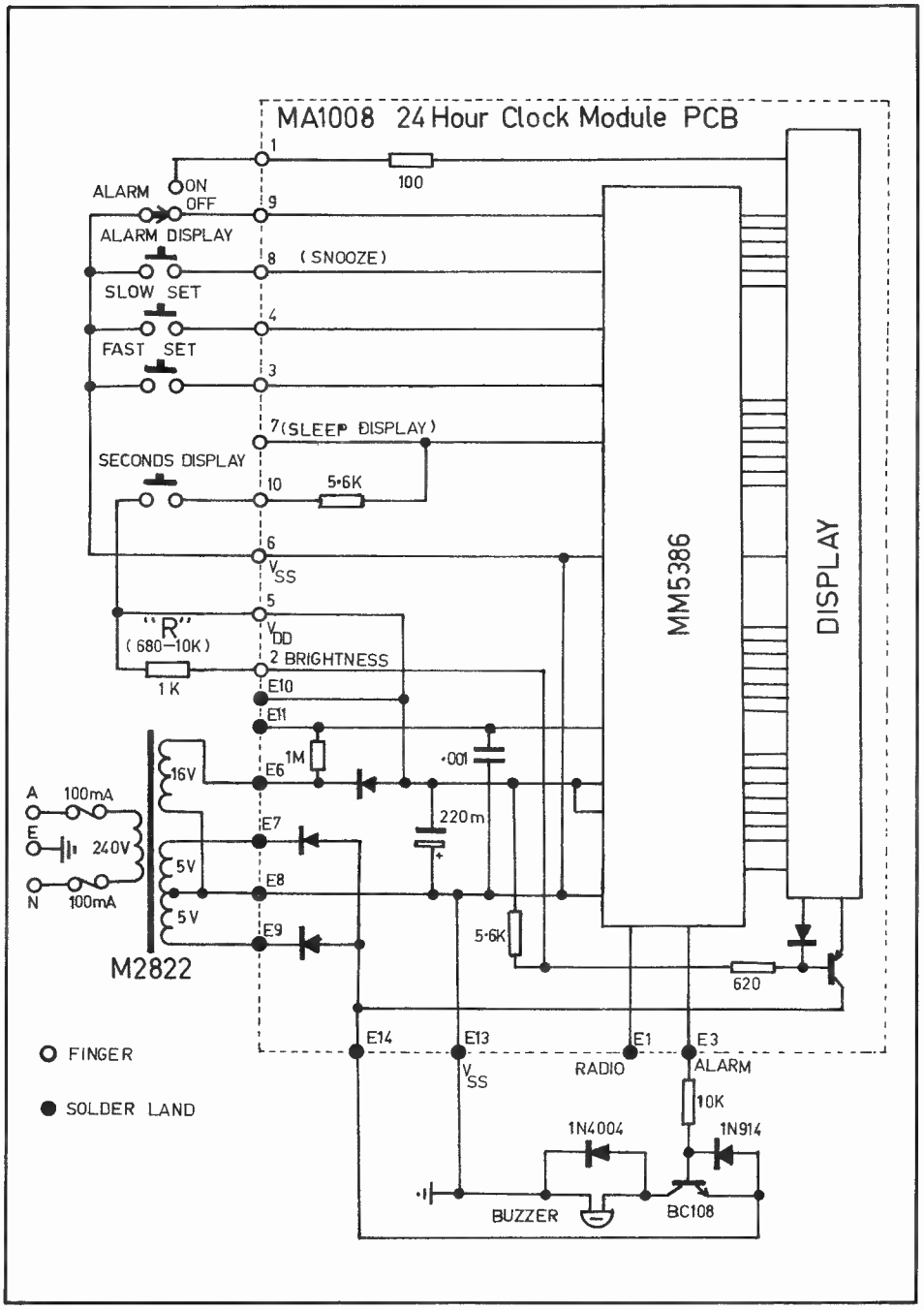

FIGURE 1: Circuit Diagram.

The module is wired up in accordance with the data sheet as shown in Figure 1. A circuit board layout with connections is shown in Figure 2. The alarm need not be used but it can be handy for reminding you of schedules or to alert you to listen to WWV for the propagation broadcast. The seconds display is used in setting the time and a toggle switch may be easier to use than a push button.

The alarm in this module provides an output to drive a transistor which turns on

a small buzzer. The diodes are to catch any spikes and may be omitted if an electronic piezo electric buzzer is used. There are several of these available ranging from $1.50 up. The sonalert is another suitable type which whilst dearer will give an ear splitting level if required. The transistor may be virtually any NPN silicon type.

The author mounted the clock in a Horwood aluminium box. These boxes consist of a piece of aluminium extrusion with suitable end plates. The module was positioned close to the edge which put the readout centrally in the end. The readout outline was then marked on to masking tape covering the panel. A suitable cut-out was then punched and filed to shape.

When mounting the module 8 BA screws were used with small insulated washers, as some tracks are very close to the mounting holes.

The brightness of the display may be adjusted by varying the values of R from 680 ohms to 10k. A fixed resistor is simplest but a potentiometer may be used if you wish to vary the brightness. The author found a 1k resistor to be suitable.

The mains fuses were included as the clock will be left on for extended periods and are a cheap insurance if anything breaks down.

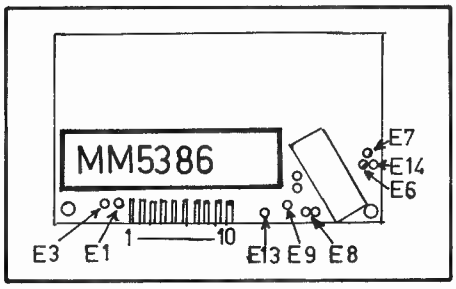

FIG. 2: PCB layout showing pins.

When switched on the display will blink until you operate either the fast or slow setting switches. The fast set switch advances the display at a rate of 50 minutes per second. The slow switch causes the minutes to advance at a rate of 2 minutes per second. These allow you to advance the time in minutes to set the correct time.

The seconds display button shows the last figure of the minutes display plus the two seconds digits. The fast and slow buttons may be operated also. The fast set button allows you to reset the seconds to zero in this condition. Also with the seconds button pushed simultaneously pressing both fast and slow buttons will reset the clock to 0 : 00 : 00 or 0 hours. This last feature may be very useful at times. To set the clock to WWV manipulate the fast and slow buttons to set the time display to one minute in advance of the last announcement. Then operate the seconds button and flip the fast button to reset the seconds to zero. Then wait till the minute display is announced.

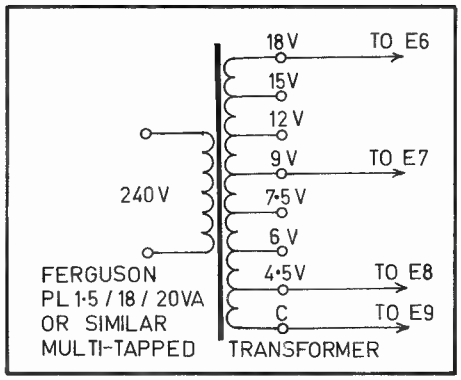

FIG. 3: Alternative Transformer

Give the fast set button a flick whilst keeping the seconds button depressed as the tone beep is heard. Release the seconds button and the clock is set on UTC.

The alarm may be set by operating the alarm display button and then using the fast and slow set buttons to change the displayed alarm time. A reset is available by pushing both fast and slow buttons in this mode. This resets to 0 : 00. The alarm is turned on by a switch which indicates on the display by an LED in the bottom right-hand corner of the display. The alarm display switch also provides a 9 minute snooze feature when the alarm operates.

Considerable variation in layout, switches and transformer used is possible and in the features used. The exact mix selected is up to you. However the result is a most useful and noise free 24 hour clock. It would also be possible to run several modules to provide a number of displays set to various time zones. This would be a very easy way to use display of time around the world.

Should you wish to use one of the multi-tapped transformers of 18 volts or so, then refer to Fig. 3 for connection details. These are often more readily available than the special clock transformer. Whilst a Ferguson transformer is shown there are many similar multi-tapped transformers made by all manufacturers. Small differences in voltage will cause no concern as the module is usable over a reasonable range of voltages. ■

AMATEUR SATELLITES

Bob Arnold VK3ZBB

	OSCAR 7			OSCAR 8		
	ORBIT	EQX.GMT	EQX.°W	ORBIT	EQX.GMT	EQX.°W
1	22304	0112	84	8012	0137	70
2	22316	0011	69	8026	0142	71
3	22329	0105	82	8039	0004	47
4	22341	0004	67	8053	0008	48
5	22354	0100	81	8067	0014	49
6	22367	0154	94	8081	0019	51
7	22379	0053	79	8095	0024	52
8	22392	0147	93	8109	0030	53
9	22404	0046	78	8123	0035	54
10	22417	0141	91	8137	0041	56
11	22429	0040	76	8151	0045	57
12	22442	0134	90	8165	0051	58
13	22454	0033	74	8179	0056	59
14	22467	0128	88	8193	0101	61
15	22479	0027	73	8207	0106	62
16	22492	0121	87	8221	0111	63
17	22504	0021	71	8235	0116	65
18	22517	0116	85	8249	0122	66
19	22529	0014	70	8263	0127	68
20	22542	0108	84	8277	0131	69
21	22554	0008	68	8291	0136	70
22	22567	0102	82	8305	0141	71
23	22579	0002	67	8318	0004	47
24	22592	0056	80	8332	0010	48
25	22605	0150	94	8346	0015	50
26	22617	0050	79	8360	0020	51
27	22630	0144	92	8374	0025	52
28	22642	0044	77	8388	0030	53
29	22655	0138	91	8402	0035	55
30	22667	0037	76	8416	0041	56
31	22680	0133	89	8430	0045	67

EDITOR'S NOTE: Due to unforeseen circumstances, this column will appear in the next issue.

TRY THIS

WITH THE TECHNICAL EDITORS

In my home brew transceiver, which uses a Yaesu 5174 kHz filter, I used originally a VFO on about 8 MHz. This gave outputs directly on 80 and 20 metres, from the difference and the sum respectively. The VFO was pre-mixed with a crystal oscillator for 40 and 15 metres. I was not happy with this as the 80 and 20 metre calibrations were different, and the 40 and 15 metre calibrations read backwards.

I have now changed the VFO to cover 5826 to 5426 kHz, and this is pre-mixed on every band. The result is a dial reading the same way on all bands, and the positions of the 100 kHz calibration points are virtually unchanged from band to band. Readers who like to build their own may be interested in an outline of the system.

The difference between upper and lower sideband carrier frequencies with this filter is 3.3 kHz. The original crystal on 5172.4 kHz was used for LSB, and another crystal on 5175.7 for USB.

As the VFO scale was not linear I preferred to use the lower half of its range for 80 and 40 metres, with pre-mixing crystals of 14.3 and 17.8 MHz respectively. The full VFO range is used on 20 and 15 metres, the crystals being 25.0 and 32.0 MHz. There are trimmers across each crystal except that on 25 MHz, and these permit adjustment of the 100 kHz calibration points to within about 1 kHz of agreement on all bands. Slightly different crystal frequencies would be necessary to improve on this.

The partial circuit diagram indicates how it is done. Note that FETs are used in mixer, crystal oscillator, and VFO functions, and that to minimise RF band-switching a separate optimised mixer-oscillator combination is used on each band.

Jonathan Kitchin VK6TU. ■

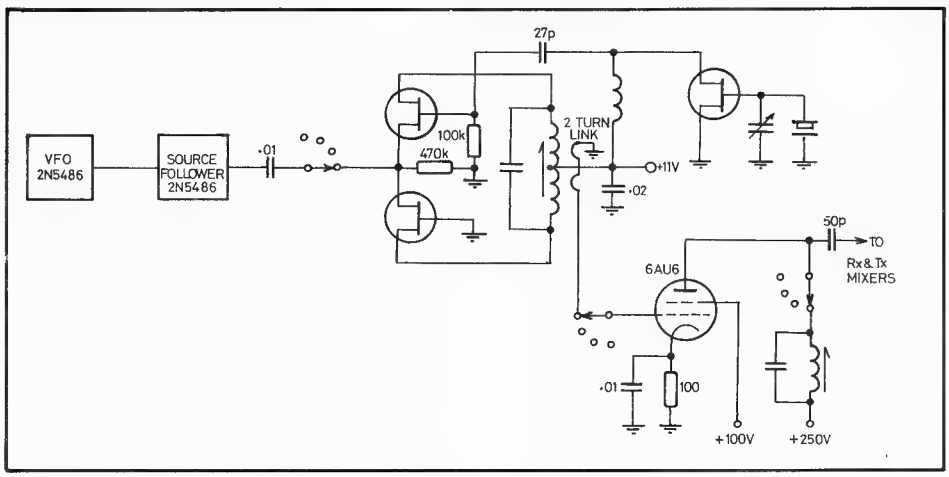

FIGURE 1: Mixer Oscillator circuit. A separate balanced mixer and crystal oscillator are used for each band.

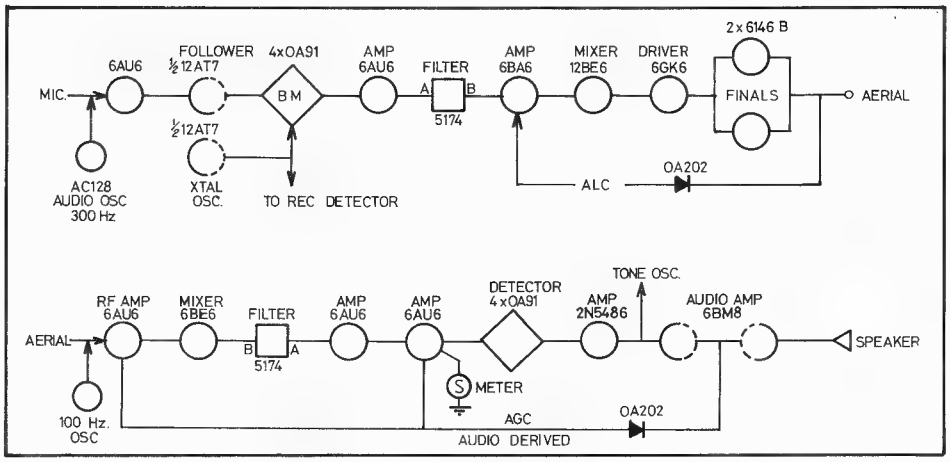

FIGURE 2: Schematic of Transceiver.

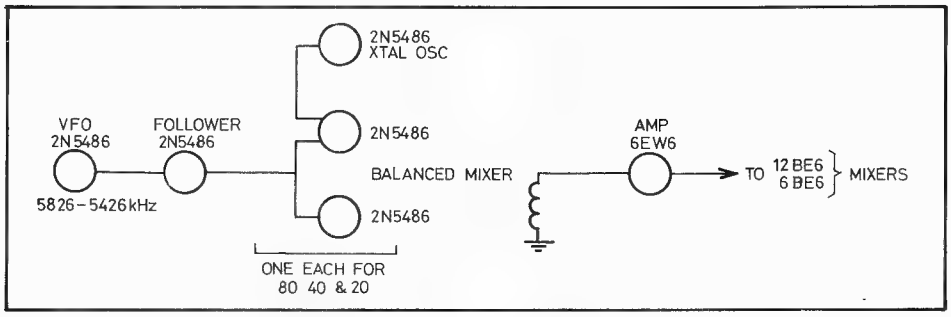

RIGHT: FIGURE 3: Schematic of Oscillator-Mixer.

MY OLD FLAME

A warmth infuses thru my frame
When I think of my old flame.
Passionate, all the more because
I made her what she really was.
Small, elegant, pert and neat;
A well-turned leg and tiny feet.
All her lines were smart and trim;
A touch of class — none more slim.
Orbs that glowed in hot replay
To every word I had to say.
— Adorned her chassis with the best
I showed her off at each Hamfest.

I treated her to tenderness.
The sweetest thing I did possess.
At times we spent the whole night thru
Close together, just us two.
And tho the years have sped away.
It only seems like yesterday.
This affair with my old flame,
But, you ask, what's her name,
This one you loved, warm and big,
The answer is, MY HOME BREWED RIG.

Alan Shawsmith VK4SS. ■

Are you checking our bands for

INTRUDERS

AND REPORTING SAME TO THE INTRUDER WATCH CO-ORDINATOR?

MY OM—AN IDIOPATHIC NARCOLEPTIC HAM

Many more YFs, YLs and OGs seem to find themselves, whether they like it or not, involved in this new surge of AR activity. I'm getting more and more calls on the twin telling that their OM's going bonkers — like working up at the top of the mast half the night to fix the beam, so as he can come down at 4 a.m. for a ten second QSO with some DXpedition. Well, here's another YF who's learnt of the funny (queer) things AR can do to the "better half". Let me tell you about my OM.

He's been a DX compulsive for many more years than I care to remember and it sure has worked some changes — even more these past few months: nodding off at odd times and places, as if suddenly bored. I put it down to no new DX but my guess was wrong, for the other day, when tidying his desk, I received quite a jolt. Being his Girl Friday, I attend to the mail. There was this letter lying open and addressed to a city psychiatrist from our local GP. It read in part, ". . . shows clear clinical evidence of IDIOPATHIC NARCOLEPSY . . . but suggest an EEG for first elimination of . . ."

I stared and read it again. No, there was no mistake: it was our own GP referring my OM to a headshrinker for a brainwave test. It took a moment for the shock to pass. So, my OB was sick — and in the head. He had IDIOPATHIC NACOLEPSY, whatever that was. The words fairly leapt out of the page at me: now I suddenly saw him in a new light — so that was why he was so cranky and bloody-minded. How long had he been getting like this? What was the disease? The name of it sounded hideous. Was I now married to a monster? What was the prognosis likely to be; would he go only half ga-ga or stark raving bonkers? Was it fatal? These and a dozen other questions began tumbling through my mind.

Suddenly I remembered the old unused medical dictionary which was gathering dust in the bookcase. I snatched for it, hardly daring to read the truth. Let me see — I . . . Ia . . . Ic . . . Id . . . Idiot: a condition of feeble mindedness; well, not yet . . . but no IDIOPATHIC. Well, what was it then — a disease of modern society? There was nothing for it but to ring the GP, who was also an old friend.

"Mac," I said, "can you see me right away?"

At the surgery, I simply slid the referral chit across his desk and said, "OK, Explain!" Doc glanced at it and smiled wanly.

"Just like your OM to leave this thing lying about and worry you over nothing."

"Nothing!" I said. "You tag him with a dreadful sounding complaint — er, what's it called, "PATHETIC EPLEPSY . . .?"

". . . IDIOPATHIC NARCOLEPSY."

"Yes and send him to have his head read by some 'shrinker' — and you say that's NOTHING. What is this, a con game, or are you up to some sort of a rip off?"

"No, I assure you, there's nothing seriously wrong with your OM."

"But he *is* sick?"

"Not in the lay sense."

"Look," I said, slapping the desk impatiently, "do you mind if we go back to square one, where I came in and asked for an explanation."

"Right, a NARCOLEPTIC is a person who can't stay awake when sleepy. Most can but a NARCOLEPTIC can't. That's the difference. He simply drops off any time, any place; such as standing up in a bus, on the phone, at a party, or even in the 'loo'. Fortunately, only very occasionally does it indicate something serious. The other day your OM dropped by for his regular medical. He complained that he's half-awake at night and half-asleep all day and getting worse. Now, I've known the OB for years and I was certain he was OK but I had an EEG done, just because any GP can't afford to make a mistake. The test showed he's as normal as both of us. Satisfied?"

"OK. Well, if he's not sick but has a medical condition, what's wrong with him!"

"Ham Radio."

"You mean that's the cause of his IDIOTIC . . ."

"Yes, he's flipped his twenty-four hour cycle."

". . . flipped his what!"

"We all have a daily cycle, which is part of our biorhythms. Nature meant us to slow down and sleep at night — but your OM doesn't. Insomniacs like he is are mostly self-made, for a variety of reasons. He doesn't know it now, because the habit's become planted in his subconscious long ago but he *wants* to get up with the first cock crow; apparently that's the time he likes to chase DX and it's put him out of tune with his natural cycle."

"How crazy — he's tuned every cycle on the HF bands a million times over and flipped his own."

"— er, yes, if you like. You can cheat on sleep for a while but, in the long run, nature wins out — and in your OM's case, he's developed IDIOPATHIC NARCOLEPSY."

"OK. What's the treatment?"

"None."

"NONE!!"

"He's happy. Just let him be. What he's got is harmless and trying to change him now, after thirty years, may produce a neurosis. I wish all my patients had a good hobby: I'd have less psychosomatic nuts to treat."

"But he's becoming an embarrassment. He has dinner, then switches on the TV and is snoring before the picture tube is in focus. Later, friends drop by and as soon as we are settled and talking, he nods off in the middle of a sentence. What can I say? If they knew he's become an IDIOPATHIC NARCOLEPTIC, there'd be a stampede out of the house. With a name like that, they'd think it was contagious, or fits, or something . . ."

"Just tell them he's been overworking."

"I know what they'd say to that!"

Well, you can't stop a thing like that from getting around the neighbourhood — and yesterday, it happened. The phone rang and I recognised the local Police Sergeant's Irish brogue. "— er, your good man is with us. He was giving some evidence about an accident he witnessed and faith, all of a sudden, he went clean out in the middle of it. He's not been drinking, he's too clear-minded for that, so tell me, does he take drugs?"

"No, never."

"Then, is he sick? We didn't want to wake him, in case it was wrong."

"Yes and no."

There was silence on the line as the arm of the law pondered the ambiguity. I knew there was nothing for it but the truth.

"He's an IDIOPATHIC NARCOLEPTIC."

More silence, then in shocked tones, "He is . . . he's a . . . he has, he is — is he THAT! Shall we get him off to hospital right away?"

"No, no, it's nothing. Just nudge him awake and he'll carry on as if it never happened."

So, there you are, that's what thirty years of AR and too much DX and too little sleep has done to my OM. Every pastime has some long term hazard. It's lumbered me with an IN for a partner. So, watch it; if your OM is a night-time DX compulsive, be prepared for anything, eventually.

I guess I'd better take the Doc's advice and try not change . . . OM . . . might . . . for . . . worse . . .Oops, sorry . . . must have dozed off at the "mill" here. I can hear a cock crowing, so it's time to QRT, or the OM'll be turning out before I turn in.

Helen, YF of Al VK4SS. ■

NOVICE NOTES

FINDING THE RARE DX

Invariably the rare DX station is "at the other end of the band". During periods of peak activity on the bands, calling CQ will not necessarily bring results.

Remember that, although the band may appear to be reasonably clear at your end, on the other side of the world there may be many local stations transmitting and possibly using the exact frequency that you are calling CQ on.

This of course would prevent your call from being heard, so it is reasonable to assume that if you do receive a reply to your CQ then either you are not getting through or the frequency is in use.

Also during busy periods, especially between early evening and midnight in Australia, many many stations will be calling CQ, possibly on the same frequency that you are using. Even though you may not hear them, the operator in another country will, and may find it difficult to sort out the jumble of call signs all coming through at once.

For this reason the experienced DX operator will listen carefully and answer an overseas station calling CQ, particularly the weaker ones.

After midnight, the majority of local operators will have gone off the air and it is more likely that with clearer frequencies, your CQ will be heard and answered.

However, it should always be remembered that any CQ at any time may bring results if you are lucky to be in the right place at the right time.

The successful DX operator is the one that LISTENS.

☆ ★ ☆

HOW TO GET THE QSL CARD

If the station you are working is considered rare DX the chances of your receiving a card by direct air mail, even though you send him yours that way, are remote. He has thousands possibly to send out and is unlikely to favour you in particular. Sending him IRCs increases the chances slightly, but it is wise to check.

I worked an Arabian station that was actually being operated by an Englishman. I asked him if he would QSL direct and would IRCs be appreciated. He said that he answered all cards and if I wanted mine direct it would certainly assist with the postage. I anticipate that that card will arrive in due course.

But remember it costs over $1 to send a letter air mail from South America, and if a station is sending out 300 cards per week, it could amount to six times his salary.

There are exceptions of course but generally they are with more personal contacts and not DX stations working many local operators for long periods at a stretch.

Helpful hints . . .

Make sure your card is filled out properly with the time in GMT.

Write a short interesting note on the back of your card, but remember that cards via the bureau are limited to five words only.

If possible, try to get your address over to the DX station at the time of contact . . . if he confirms it correctly you have a chance.

Send one card direct, one through the bureau as well.

Confirm with the DX station at the time of contact that he is OK in the latest call book.

Countries that are reliable in returning QSLs: England, Scotland, France, Germany, Sweden, Norway, Denmark, Japan, Canada.

75 per cent returns: USA, New Zealand, Brazil, Italy, Spain, Eastern Europe.

50 per cent returns: Mexico, other South American countries, South Africa, USSR, Central America, South-East Asia, India, the Far East.

☆ ★ ☆

DIRECT OR VIA THE BUREAU

Cards may be sent via the WIA bureau free of charge or at a nominal cost to members.

A maximum message of five words is permitted in the remarks section on your card and the call sign of the station to whom the card is to be sent should be written on the back in the top right hand corner.

Cards sent via the bureau to Australian amateurs may be collected free of charge.

Postage rates at present are (air mail): USA and Canada 50c, Japan 40c, Europe and foreign 55c.

It is not always wise to send unsealed envelopes marked "card only" to certain foreign countries. Do not put Y3GH, for example, or any indication that the letter is to an amateur, as this invites the IRC or green stamp thief.

All cards to the Soviet countries must be sent to Box 88, Moscow, and no Russian may QSL direct. You will receive any Russian cards through the bureau.

☆ ★ ☆

TIME

When you are working USA at 2300 GMT on Monday 16th in Melbourne it will be Sunday night on the 15th in USA.

When you are working England at 1100 GMT on Monday 16th in Melbourne it will be Monday on the same day in England.

☆ ★ ☆

CALLING CQ

When you do find the occasion to call CQ the following procedure is generally successful.

"CQ Fifteen . . . CQ Fifteen . . . CQ Fifteen Metres . . . Victor Kilo Three November November Romeo . . . calling CQ Fifteen Metres Beaming Short Path Europe and standing by".

Listen for ten seconds or so then repeat the call. If no response is heard after three such calls try a different part of the band.

It is quite in order to call CQ Wyoming, or CQ Europe, etc., if you wish to work a particular area of the world, but remember if you just call CQDX you are obliged to answer any operator who might reply.

—From CQDX Radio Group Handbook — by Trevor Reid VK3NNR, Box 79, Heidelberg, Vic. 3084.

EDITOR'S NOTE

This completes the series from the CQDX Radio Group Handbook. Many thanks to Trevor VK3NNR and his group for their efforts in helping to publicise the proper method of using an amateur station.

(VK3UV) ■

☆ ★ ☆

HAD A WOODPECKER IN THE PILE-UP LATELY?

Have you ever known the frustration of copying that elusive piece of DX on HF and suddenly been plagued by an ever-increasing crescendo of zips, zaps, crackles and grinds reminiscent of a buzz saw with a power supply suffering from the bends?

In total disgust have you then retired to the comfort of your living room and switched on the faithful old colour, or black and white telly only to have your distraught nerves totally shattered by half the picture vanishing beneath a series of fragmented lines moving in bands either slowly up, or down the screen?

Fear not! You haven't been smitten by the dreaded Russian Woodpecker, the Soviet over-the-horizon radar transmission; we have a far worse enemy in our midst: That of electrical transmission line hash.

As far as radio signals are concerned, it has largely been a country area problem, as signals in the city and suburban areas are usually strong enough to drown out the majority of the hash, on the medium and low frequency bands. With the gradual introduction of many local country commercial broadcasting stations, the problem of hash tended to be pushed into the background — that is, until the introduction of television, and particularly colour television. It manifests itself here in a number of ways:—

With black and white receivers the hash shows up usually as a series of black dots

occupying one line space, and combined into 2 bands of varying widths which move up or down the screen obscuring 50 per cent of the picture area. The number of lines involved, and their movement either up or down is usually dependent on the precise relationship between the mains frequency and the field scanning rate. In very severe cases where the interference bandwidth is wide and of a very strong intensity, it can cause horizontal pulling of the picture when the vertical synchronisation is tripped, by its movement into the vertical blanking period. In some cases it affects the vestigial sideband carrying the sound, destroying its quality.

It has been noted by the author of this article at his home QTH, that the effects are not wholly confined to MF commercial broadcast stations and VHF television stations. It rears its ugly head in all portions of the HF amateur allocations, and becomes progressively worse as the frequency drops. On occasions, listening to 80m on a general coverage receiver becomes near impossible!

One peculiarity of the dreaded hash is its relationship with changes in weather conditions. Usually with the onset of rain the problem will vanish, leaving the airwaves very clear while the weather remains wet. When the fine weather returns, it may be days or even weeks before it returns again. This is particularly so during the winter months. On the other hand it is aggravated by the humid conditions encountered during the summer months; particularly at sundown with a drop in temperature and a change in humidity. Light rain drizzle will often trigger it into its worst form of disruption until the onset of heavy rain. I have noticed at my QTH that there appears to be a definite link between the above factors and the load condition of a step-down transformer not 30 metres away from the house.

Many theories have been forwarded as to the reason for this interference, the most common being that of the "dust on the insulators", where a layer of dust provides a leakage track across the insulators until rain washed it off. The same problem occurring again when another layer of dust accumulated. Another theory is that of the "loose hardware" variety. It suggests that any two pieces of metal in loose contact within a strong field adjacent to the power cables could produce small sparks between them, thus generating an RF field.

Whatever the answer is, there is no doubt that the high voltage transmission lines can seriously affect the reception of both radio and television signals when the abovementioned conditions prevail. It is also hoped that some kind soul in the responsible utility organisation will read this article and hopefully for ever banish the dreaded Gosford Woodpecker.

Cliff Perrin in Smoke Signals, June 1979. ■

AROUND THE NOVICE SHACKS

THE CQDX RADIO GROUP
Our group is just one of many thousands of similar groups throughout the world with the same aim, to assist each other. Long may it continue.

Photo No. 1: SEATED, from left: John VK3NNF, Roy VK3AOH, Paul VK3VDP (front), Ian VK3VAG (Club President), Trevor VK3NNR, Wayne VK3VEW (front), Bob VK3VGQ, Bill (SWL), Peter VK3NNY. BACK ROW, standing from left: Kevin VK3NXE, Rick VK3VHF, Gerard VK3NWZ, Graham VK3NOA, Mark VK3VEV, John VK3NXB, David VK3NDO, Colin VK3VBU.

The above photo shows the other two senior members of the club and they are: Len VK3ZGP/NAC (left) and Howard VK3ZJY/NGV. We have one other ham in the group (not illustrated) and that is Merv VK3AMB who instructs in Morse Code. (VK3NXE and VK3NWZ are brothers as are VK3NOA and VK3NNY. VK3VHF and VK3VDP are father and son and so are VK3VAG and VK3VEV.

Over 1300 CCA transmitters are in use world wide. The CCA FM range covers everything from a modest 10W. to 80KW. Why do so many broadcasters rely on CCA? Because all CCA transmitters are designed to cut operating costs.
By using proven grounded-grid design. Grounded-grid design cuts the expense of frequent replacement which is inherent in designs using HF tetrodes for FM transmission. In a recent survey, WFPG-FM achieved continuous running of 55,586 hours from a final amplifier tube.
That's CCA efficiency and economy in action.
CCA make a full line of FM transmitters, antennas and accessories.
When you want to make great sounding savings on your new installation, call us for the full CCA story.

What do 34 leading North American broadcasters and VICOM have in common?

WFPG Atlantic City
KFOX Long Beach
KOSI Denver
KVOD Denver
KAAT Denver
WMOD Washington
WEBH Chicago
WEFM Chicago
WGRT Chicago
KADI St. Louis
KCFM St. Louis
WNYR Rochester
WEED
WDA
WMG

WFCN Nashville
WAMB Nashville
KRBG Houston
KHCB Houston
KRSP Salt Lake City
WQFM Milwaukee
WFMR Milwaukee
CBC Toronto
CBC Calgary
CBC Winnipeg
CBC Peace River
CBC Kitimat
CBC St. Johns
CBC Halifax
CBC Ottawa

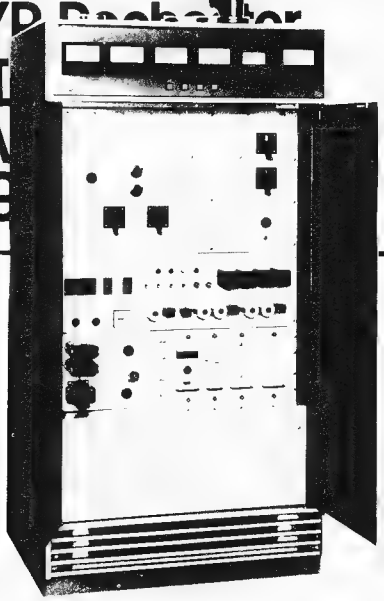

CCA-FM transmitters are available with ratings from 10, 40, 100, 250, 1000, 2500, 3000, 4000, 5000, 8000, 12000, 20000, 25000, 27500, 40000, 55000 and 80000 watts. CCA also offers a full line of AM, FM, HF, UHF and VHF transmitters and TV translators. Accessories include limiters, auto switchers, auto power controls, studio equipment and consoles.

VICOM

Vicom International Pty Ltd
68 Eastern Road, Sth Melbourne
Phone (03) 699 6700

QUALITY ACCESSORIES FROM DAIWA

NEW!

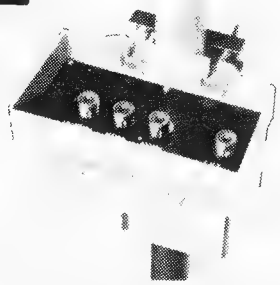

Mast-Head Divider

AD103X 59.00

Run 70 cm, 2m and HF antennas into the one coax line.

Automatic Antenna Tuners

CNA1001	200W Model	269.00
CNA2002	2.5 Kw Model	569.00

A new concept in antenna tuning!
Patent application pending.

SWR & POWER METERS

Model	Freq.	PWR	Cross-Needle	Price
CN620	1.8-150 MHz		yes	99.00
CN630	140-450 MHz	20/200	yes	135.00
CN650	1.2-2.5 GHz	2/20	yes	169.00
SW210A	1.8-150 MHz	20/120	no	99.00

Cross-needle type offer DIRECT readings.

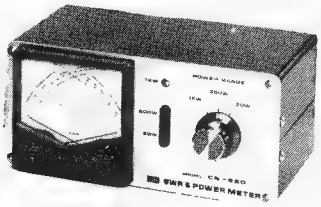

ANTENNA COUPLERS

CL67A	1.9-28 MHz, 500 wpep	135.00
CNW217	Includes SWR/PWR Meter, 200W	165.00
CNW417	Includes SWR/PWR meter, 500W	199.00

High quality couplers, 2 models includes cross-needle SWR/PWR meters.

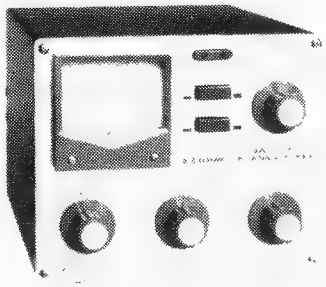

SPEECH PROCESSORS

RF660	Phasing type dc	109.00
RF440	Phasing type ac/dc	126.00
RF550	Fitter type, ac/dc	169.00
MC330	Speech compressor	99.00

Increase talk power with splatter free operation. RF clipping (not in MC330) assures low distortion. Simply install between microphone and transmitter.

Typical specs RF660:
Talk power: Better than 6dB
Freq. Response: 200Hz-3000Hz at 12dB down
Distortion: less than 3% at 1 KHz, 20dB clipping.
Power Req.: 13.8 Vdc at 50mA.

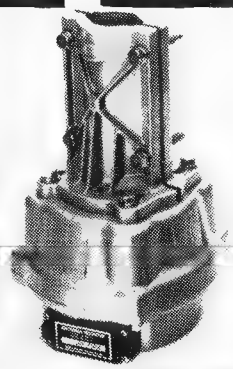

ROTATORS

DR7500S	Medium Model	189.00
DR7600S	Heavy Duty Model	259.00

* High dependability: weather sealed
* Quiet operation
* Complete with attractive controller

	DR7500S	DR7600S
Rotation Torque	500 Kg-cm	600 Kg-cm
Braking torque	2000 Kg-cm	4000 Kg-cm

COAXIAL SWITCHES

2	Position model CS201	23.00
4	Position model CS401	59.00

Professionally engineered cavity construction, high isolation.
Power rating: 2.5 KW pep, 1 KW CW
Impedance: 50 ohm
Insertion loss: less than 2dB
Maximum frequency: 500 MHz
Isolation: Better than 60dB at 300MHz.

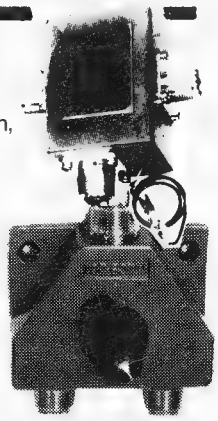

COAXIAL RELAYS

CX2L	100W pep max model	45.00
CX2H	200W pep max model	69.00

Quality change-over relays use 10-15 vdc.
Frequency Range: CX2L 1.8-170 MHz.
CX2H 1.8-450 MHz.

VICOM

Available from your Vicom Dealer

VICOM 68 Eastern Road,
South Melbourne,
Victoria, 3205
Ph. (03) 699 6700

MORE GOOD NEWS ABOUT NEW GEAR — FROM VICOM

KENWOOD R-1000 COMMUNICATIONS RECEIVER

200 KHz-30 MHz

$485

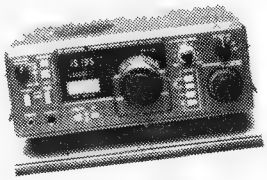

OVER 2,100 SOLD!

Yes, more than 2,000 IC22S have been sold in Australia! Surely a mark of success for this superb rig.

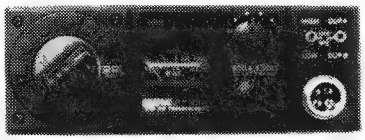

IC22S 2MFM STILL $299

ICOM IC211

2m transceiver

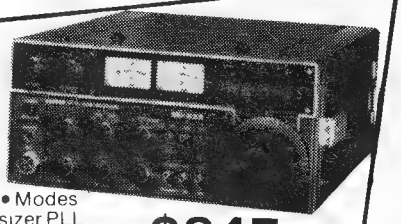

• 144 to 148 MHz coverage • Modes SSB, CW, FM • LSI synthesizer PLL • 4-digit LED readout • Pulse-type noise blanker • VOX w/adjustable gain • SWR bridge • CW monitor • Automatic power control • AC/DC power supplies • Antenna impedance 50 ohms unbalanced • TX output, 10W PEP.

$847

800CH TRANSCEIVER

— handheld —

* 1.5w output
* 144-148 MHz
* 800 chs, 5 KHz steps
* 600 KHz Repeater offset
* Supplied with SEC approved charger
* 90 day VICOM warranty

PRICE: NOW $355

Daiwa Low Pass Filters

FD30LS	32 MHz, Fc, 200 w, 3 stages — $20.00

Baluns

AS-BL	Asahi 50 ohm for beams — $34.00
BL50A	50 ohm, 4 KW, 1:1 for dipoles — $32.00
BL70A	70 ohm, 4 KW, 1:1 for dipoles — $32.00

Leader Test Equipment

LAC 895	Antenna Coupler 3.5 — 28 MHz — $182
LPM 885	SWR/PWR Meter — $97
LPM 880	RF Power Meter — $139
LDM 815	TR Dip Meter — $89.00
LBO 310	3" Ham Oscilloscope — $330
LA 31	Ham monitorscope adapter — $26.00

Radio Teletype Terminal

0-7000	Tono RTTY CW/Baudot/ASCII — $839

Tubes

6KD6	Finals for Yaesu linears — $9.00
6JS6C	Finals for Yaesu transceiver — $9.00
12BY7A	Driver — $3.75
6146B	Finals — $12.00

CW Filters

FT101E	Yaesu — $39.00
TS520S	YG3395 Kenwood — $57.00
TS820S	YG88C Kenwood — $59.00

Morse Keys

HK702	Deluxe Key with marble base — $41.00
HK708	Economy Key — $23.00
HK706	Operator's Key — $25.00
MK701	Manipulator (side-swiper) — $45.00
PALOMAR	1C Keyer — $149.00

Jaybeam Antennas

5Y/2m	5el 2m, 7.8 dBd gain, length 1.6 m — $43.00
8Y/2m	8el 2m, 9.5 dBd gain, length 2.8 m — $51.00
10Y/2m	10el 2 m, 11.4 dBd gain, length 4.4 m — $84.00
10XY/2m	10el 2m, cross yagi, 11.3 dBd — $114.00
D8/70cm	Twin 8el, 70 cm, 12.3 dBd, 1.1 m — $64.00
PBM 18/70	18 el, 70 cm, 14.9 dBd, 2.8 m — $96.00
MBM 48/70	48el, 70 cm, 15.7 dBd, 1.83 m — $83.00
MBM 88/70	88el, 70cm, 18.5 dBd, 3.98 m — $105.00
PMH/2C	Phasing harness — $20.00
8XY/2m	2m cross yagi, 8el, 9.5 dBd, 2.8 m — $99.00
12XY/70 cm	70 cm cross yagi, 12el, 13.0 dBd, 2.6 m — $139.00

Parabolic Dishes

PBA 1200	70 cm and 1.2 GHz complete — $349.00

Rak Antennas

AL24DXN	20-40 m trap dipole — $70.00
A4VPN	40 m dipole kit — $27.00
LISTENER 3	Short wave Rx antenna — $49.00
LISTENER 1	Short wave Rx antenna — $22.00

Nagara

SS56	6 m 5el beam 1 KW — $159.00
V5JR	80-10 m trap vertical, 6.7 m high — $129.00
V4JR	40-10m trap vertical, 5.2 m high — $99.00

Hy-Gain Antennas

HYQUAD	10/15/20 m, 2 element quad — $279.00
204BA	4 el monobander for 20 m — $259.00
TH60XX	6 el tribander — $310.00
TH3MK3	10/15/20 m 3 el beam — $249.00
TH3JR	10/15/20 m 3 el beam — $229.00
203BA	3 el beam 20 m — $199.00
LONG JOHN	5 el wide spaced 27/28 MHz — $180.00

Scalar

M22T	1/4 wave 2 m mobile whip, top only Qty 1-4 — $7.00
M25T	5/8 wave 2 m mobile whip, top only Qty 1-4 — $14.00
BASE	B/L for above — $4.00

ICOM Gear

IC701	transceiver NOW — $1199.00
IC22S	2m transceiver — $299.00
IC551	6m transceiver — $799.00
IC280	2m fm remotable — $450.00
IC502	6m ssb portable — $239.00
IC202S	2m, ssb portable — $318.00
IC211	2m all mode — $847.00
ICRM3	Remote control unit — $159.00

Microphones

VM-1	Noise cancelling, hand ptt, low z — $10.00

Coaxial Cable

RG58AU	mil spec. 30m reels — $13.00
RG213/U	mil spec. per metre — $1.40

Kenwood Transceivers

TS520S	HF transceiver — $635
TS120S	Solid state 100w — $735.00
TS120V	Solid state 10W — $600.00
TS180S	Solid state 10w — $1240.00

Call us today for a good deal.

Monitor Receivers

747	Vicom Aircraft Scanner — $199.00
210	Bearcat 210, scanner — $469.00
HF12	VHF pocket, 12 channels — $149.00

VICOM

Duncan Baxter VK3LZ
Customer Service Manager

Perth 321 3047
Newcastle 69 1222

Sydney 635 6399
Adelaide 43 7981
Rockhampton 28 2843

Gold Coast 32 2644
Geelong 78 9660
Melbourne 836 8635

Brisbane 341 2332
Townsville 72 2633

Vicom
68 Eastern Road,
South Melbourne,
Victoria, 3205.
(03) 699 6700

Launceston 44 3882
Brisbane 38 4480
Adelaide 272 8417
Kalgoorlie 21 1906
Wellington(NZ)287 946
Wagga 21 2125

Supplying the Enthusiast . . .

SELECTIVE RANGE OF AMATEUR EQUIPMENT

POPULAR BRANDS OF H.F. & V.H.F. TRANSCEIVERS, ANTENNAE, ROTATORS

and MOST AMATEUR ACCESSORIES

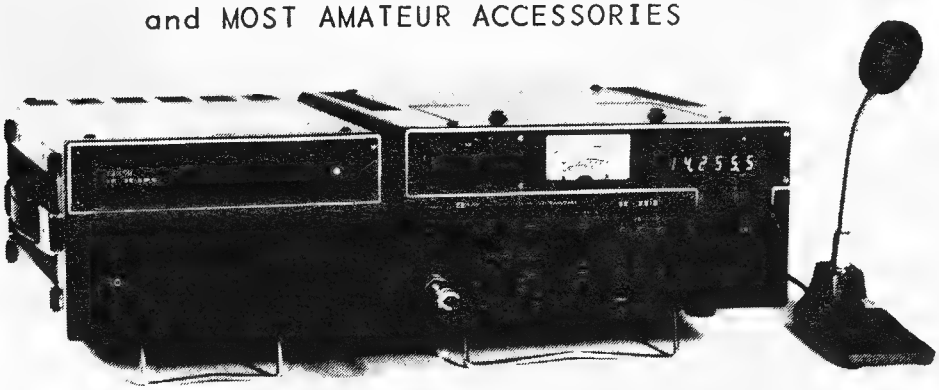

SALES AND SERVICE

graham e. stallard

27 WHITE AVE LOCKLEYS 5032
SOUTH AUSTRALIA PHONE 43 7981

VICOM DISTRIBUTOR FOR SOUTH AUSTRALIA

Please Phone, Call or Write for your requirements

Si

CRYSTAL FILTERS - FILTER CRYSTALS - OSCILLATOR CRYSTALS

SYNONYMOUS for QUALITY and ADVANCED TECHNOLOGY

KVG

Listed is our well-known series of 9 MHz crystal filters for SSB, AM, FM and CW applications.

Export inquiries welcomed

Filter Type	XF-9A	XF-9B	XF-9C	XF-9D	XF-9E	XF-9M	XF-9NB
Application	SSB Transmit	SSB Receive	AM	AM	FM	CW RTTY	CW RTTY
Number of Filter Crystals	5	8	8	8	8	4	8
Bandwidth (6 dB down)	2·5 kHz	2·4 kHz	3·75 kHz	5·0 kHz	12·0 kHz	0·5 kHz	0·5 kHz
Passband Ripple	< 1 dB	< 2 dB	< 2 dB	< 2 dB	< 2 dB	< 1 dB	< 0·5 dB
Insertion Loss	< 3 dB	< 3·5 dB	< 3·5 dB	< 3·5 dB	< 3·0 dB	< 5 dB	< 6·5 dB
Input-Output Termination Z_t	500 Ω	500 Ω	500 Ω	500 Ω	1200 Ω	500 Ω	500 Ω
Input-Output Termination C_t	30 pF	30 pF	30 pF	30 pF	30 pF	30 pF	30 pF
Shape Factor	(6:50 dB) 1·7 (6:80 dB) 2·2	(6:60 dB) 1·8 (6:80 dB) 2·2	(6:60 dB) 1·8 (6:80 dB) 2·2	(6:60 dB) 1·8 (6:80 dB) 2·2	(6:60 dB) 1·8 (6:80 dB) 2·3	(6:40 dB) 2·5 (6:60 dB) 4·4	(6:60 dB) 2·2 (6:80 dB) 4·0
Ultimate Attenuation	> 45 dB	> 100 dB	> 100 dB	> 100 dB	> 90 dB	> 90 dB	> 90 dB
Price	**$40·65**	**$55·10**	**$59·30**	**$59·30**	**$59·30**	**$41·50**	**$73·45**

In order to simplify matching, the input and output of the filters comprise tuned differential transformers with the "common" connections internally connected to the metal case.

Registration Fee: $3.00; Air Mail: 31c per ½ oz. Shipping weights: Filters 2 oz. ea. Crystals ½ oz ea. All Prices in U.S. Dollars.

Matching Oscillator Crystals

XF900 Carrier	9000·0 kHz	$4·75
XF901 USB	8998·5 kHz	$4·75
XF902 LSB	9001·5 kHz	$4.75
XF903 BFO	8999·0 kHz	$4.75
F-06 Crystal Socket (HC25/u)		·50

Oscillator Crystals 50 kHz through 150 MHz available to order. Parallel resonant (30 pF) to 20 MHz, series resonant above 20 MHz. Write for quotation to your requirements (include mechanical size & frequency).

Matching FM Crystals Discriminators for XF-9E

	Freq Dev	Slope	Price
XD-9-01	– 5 kHz	– 40 mV/kHz	$27·80
XD-9-02	– 10 kHz	– 24 mV/kHz	$27·80
XD-9-03	– 12 kHz	– 50 mV/kHz	$27·80

SPECTRUM INTERNATIONAL INC. Box 1084A, Concord, Mass. 01742 USA

VHF-UHF
An expanding world

Eric Jamieson, VK5LP
Forreston, S.A. 5233

AMATEUR BAND BEACONS

Freq.	Call Sign Location
50.001	WA6MHZ — San Diego
50.004	PY1RO — Rio de Janeiro
50.010	HL9TG — Seoul *
50.023	HH2PR — Haiti
50 025	6Y5RC — Jamaica
50 030	HC1JX — Ecuador *
50.030	KL7CDG — Alaska
50.030	ZS6PW — South Africa *
50.035	ZB2VHF — Gibraltar
50.050	WA1ENX — Maine *
50 050	ZS6LN — South Africa *
50.075	HK3/4 — Columbia (repeater)
50.080	TI2NA — Costa Rica
50.088	VE1SIX — New Brunswick
50 091	WA6JRA — Los Angeles *
50.092	W7KMA — Oregon*
50.093	WA8FTA — Michigan *
50.098	K7IHZ — Arizona *
50.100	ZS6HVB — South Africa *
50.101	FO8DR — Tahiti *
50.104	KH6EQI — Pearl Harbour
50.110	KG6JIH — Guam *
50.110	JD1YAA — Marcus Island *
50.110	KH6 — Marshall Islands *
50.110	KG6RO — Saipan *
50 110	AL7C — Alaska *
50.500	5B4CY — Cyprus
51.999	YJ8PV — New Hebrides
52.100	VK0BC — Casey Base
52.200	VK8VF — Darwin
52.300	VK6RTV — Perth
52.350	VK6RTU — Kalgoorlie
52.400	VK7RNT — Launceston
52.450	VK2WI — Sydney
52 500	JA2IGY — Nagoya
52.500	ZL2VHM — Palmerston North
52.510	ZL2MHF — Mt. Climie
52.800	VK6RTW — Albany
52.900	VK6RTT — Carnarvon
53.000	VK5VF — Mt. Lofty
144.010	VK2WI — Sydney
144 400	VK4RTT — Mt. Mowbullan
144.475	VK1RTA — Canberra
144.500	VK6RTW — Albany
144 600	VK6RTT — Carnarvon †
144 700	VK3RTG — Vermont
144 800	VK5VF — Mt. Lofty
144 900	VK7RTX — Ulverstone
145.000	VK6RTV — Perth
145.100	ZL1VHF — Auckland
145.150	ZL1VHW — Waikato
145.200	ZL2VHF — Wellington
145 250	ZL2VHP — Palmerston North
145.300	ZL3VHF — Christchurch
145.400	ZL4VHF — Dunedin
147.400	VK2RCW — Normanhurst
432.400	VK4RBB — Brisbane
432.475	VK7RTW — Ulverstone

* Denotes attended operation.
† Denotes new beacon — see text.

BEACON NEWS

Andy VK6OX advises they are waiting P. and T. consent to operate their 2 metre beacon VK6RTT on 144.600 MHz. Taking a chance, I have included the beacon in the list in the hope the time lag between now and when you read this the permission may have been granted!

"Break-In" mentions the Auckland VHF Group have constructed a 6 metre beacon for operation on 52.100 MHz to be installed in the Waitakere Ranges. The Wellington VHF Group have constructed a 10 GHz beacon to operate on 10.370 GHz with a power of 30 watts and operating from Hawkins Hill near Wellington and 454m a.s.l. I gather reports would be welcome from Australia!

Rolf Rasp PY1RO writes that his beacon is on continuously from Rio de Janeiro, using a 5/8 wave vertical and 10 watts output. He is considering replacing the antenna with a 3 element beam, with some thoughts to turning it toward VK as time permits.

I hear also there is to be a new 6 metre beacon near Hobart on 52.370, which now awaits P. and T. approval. Nothing really definite on this one at present, but mentioned here for your reference.

ANTARCTIC NEWS

Direct contact via 20 metres has been made with Brian VK0BC at Casey, who is still very interested in getting 6 metres operational from there. The 300 mW beacon is still operational, running into a 6 element beam. Brian was very pleased to learn that VK5 were preparing for him and those that follow 6 metre equipment to put the area on the air with reasonable power — aided by the loan of an IC502 by Barry VK2ZXB, for which we are very grateful. The unit is in excellent condition and is now in the hands of David VK5KK, who is building a solid state linear amplifier to run about 40 watts. It is hoped to be able to send the package south on the next plane in November, which will be in time for the summer Es season this year. Brian will finish his tour of the south in January, but we are hoping he can arrange for his relief to continue to operate 6 metres, especially over the March-April period 1980. We want to thank those other people who have offered donations towards the project, which is already creating considerable interest overseas.

HIGHER POWER FOR NEW HEBRIDES

Peter YJ8PD looks like being a very active six metre station in the future and currently uses a TS600 to drive a 3-500Z linear amplifier to about 100 watts, which is about the total capability of the driver stage. In an effort to let Peter use the power his linear is capable of the VK5 gang are sending him a driver stage of about 40 watts thus enabling him to have an output of 500 to 600 watts, which should be a very worthwhile increase. By the time you read this some of you will probably have worked Peter using the extra power.

Peter also advises that the YJ8PV beacon is to be shifted to be at his QTH and will be turned off when he is working on six metres. The YJ8PV does cause some problems with mixing and other frequencies when both stations are on the band simultaneously — apparently when Peter works on 50 MHz things are not so bad, but bad news on 52 MHz.

Some other information gleaned from Peter indicates Bob T2AAA (ex VR8), who works at the weather station on Tuvalu Island, would also like to try 6 metres. Other active stations are KX6SC (Chris) and KX6SA (Reg) on Quaduline Island. Chris runs an IC502 but Reg runs more power and can use CW. Both stations are currently set up for 50 MHz but have been advised about 52.

VU2RM in India uses CW on 50.070, 50.100, 50.150, 52.050 and 52.550, while 4S7XA from Sri Lanka could be operational on 50.120.

Also noted off air that KZ5NW will be leaving the Canal Zone soon for Puerto Rico, leaving KZ5JM as the alternative station now. This area may become HP1 in due course. The HC1JX beacon was to have a power increase so it may be better heard by the time you read this.

SIX METRES AS SEEN FROM VK5

In the late part of July and early August very little Es activity. However, the three consecutive days, 12th, 13th and 14th August, gave some unusual short skip Es. On 12-8 around 0330Z VK1 to VK5 opened with VK5ZJG, VK5AVQ to VK1RK, about 590 miles. Same time the band also open from VK3 to VK4. On 13-8 0230Z Ch. 0 Melbourne became stronger than usual on 51.760, generally with normal conditions the sound carrier is about +5 dB signal to noise. At 0305Z the VK7 beacon became audible on 52.400 MHz, peaking S5 and disappearing at 0410Z. At 0315Z VK5KK worked VK3ZTK in Melbourne, 5 x 9. Others on included VK3VD, VK3AMK, VK5ZBU and VK5ZGZ. Strong backscatter on local signals (5KK to 5ZBU, etc.) both running high power, around 0340Z. Last contact VK3AMK to VK5ZBU, and typically like Es the skip zone was down to something like 5 miles at closing, i.e. the difference between 5 x 9 and nothing. Last signal 0358Z. Greatest distance 430 miles, shortest about 385 miles. All signals 5 x 8 — 9+. On 14-8 similar opening from 0430Z to 0515Z but Ch. 0 Melbourne not as strong as day before. VK7 beacon audible. At 0442Z VK7KJ (?) heard on CW on 52.050. On 17-8 band opened to Townsville from Adelaide at 1000Z. No amateurs heard. YJ8PV audible in noise at same time as VK4RTL.

SIX METRES GENERAL

Before going into the mass of overseas openings, a brief run up to the beginning of the equinoxial season in VK5. Until 14-8 most MUF readings generally up to 40 MHz on double hop to the north during the daytime. Except for freakish JA opening on 14-7 very little over 44 MHz since 22-5-79. Single hop (F) to near Asia usually to 41.5 MHz. A number of magnetic storms in late August upset the pattern of things, providing JA openings to at least Brisbane though still more 50 MHz than 52 MHz. Best days for MUF to 35°S were on 20-8, 21-8, 23-8 and 26-8. A reasonable magnetic storm occurred on 19-8. On 26-8 the first (and the beginning of the equinoxial season here at least) 52 MHz JA openings of any note to VK5 occurred. Signals from 0832Z to 0905Z. Areas JA1, 2 and 3 to VK5s KK, LP, ZMO, ZZZ. Peaking to 5 x 9+. It would appear the band was open to northern VK4 listening about and to Carnarvon with JR6HJD heard working VK6OX at 0900Z on 52.057 5 x 9. No other areas heard in dog-piles. This opening is 22 days earlier than the first signficant opening to JA last year.

SIX METRES INTERNATIONAL

It seems things are really shaping up for the following 9 months both propagation-wise and new station-wise!

C21AA DXpedition a great success from 10th to 15th August. Organiesd by JA1UT and the same crew as the YB0X journey. Approximately 10 countries worked, including JA, KG6, KX6, P29, H44, possibly 3D2, and VK4RO. Nothing is known about the last contact except that it did occur. C21AA has been left the IC551 and 6 element yagi so there is some good news for Nauru hunters on six metres. QSL via JA1UT for DXpedition.

HS1WR is very active from Thailand with a single 4CX25QB and 300 watts into four 5 element yagis. Most DX so far to JA. Still in the Asian area good to hear VU2RM is on as reported earlier. The Sri Lanka station also mentioned earlier has taken delivery of a TS600 plus antenna and beacon keyer, all made available by the JA6 Kyushu 6m Group. At present it has been indicated operation will be on 50.120, but with that sort of equipment it will be possible to operate elsewhere, including 52.050. Additionally, YB0X is expected to be re-activated during a September-October DXpedition.

Shifting to the Pacific Ocean, north of VK now. At the moment there are three JD1 stations active on six metres. On 24-8 KX6SC heard working KG6 from JA. Another KG6 station active from Guam, KG6JSG with a FTV650B to a 6 element. JA1NVG may be going to the Caroline Is. (KC6) during September for 6 metre DXpedition. VK8GB has KX6BU confirmed on 52 MHz. The Es season has toned down in the Northern Hemisphere, the best Es DX around JA in late July only to JD1, HL9 and KG6. On 28-7 opening between H44 and VK4 and VK8, heavens knows how many since then! Evening TEP to VK8 and northern VK4 and VK6 common from mid-August onwards to JA, etc.

SOUTH PACIFIC

N6DX going on a 160 metre and 6 metre DXpedition (that's really handling the stick at both ends) and will be starting from KH6 on 1-9, arriving at ZK2 around 16-17 September. ZK2 is NIUE west of Cook Is., then on to A35 Tonga, 5W1 Western Samoa, KH8 American Samoa and finish at 3D2 Fiji. The 3D2 stay will be useful for many stations wanting to get QSL cards (second time lucky!). Now more good news. Some more JAs have sent an FT625 plus antenna and beacon system to the Northern Line Is. The two calls to look for are VR3AR and VR3AH. However, it is

likely a change will be made in the Northern Line Is. prefix so beware of this when beaming towards the area, which is 1500 miles south of Hawaii. By the way, N6DX will be taking an IC551 with 100 watt Lunar Amplifier and 6 element beam with him on the trip.

Still in the South Pacific, remember YJ8PD with 500 watts, plus YJ8KM. On 25-8 Peter YJ8PD worked KX6, KG6 and KH6 all in one go! And we are assured there is unlikely to be any 6 metre operating from Norfolk Is. in the foreseeable future, unless someone goes there specifically to do so. VK9NI will certainly not be on, and the other station there VK9NW is in fact an N call (!) and thus not able to work six metres. And despite what you might have heard on the air, Hal VK4DO will NOT be going to Norfolk Is. now or at any time — and that's straight from the "horse's mouth", as a phone call from the VK5LP establishment to Hal VK4DO asking if it was true brought the negative answer, and a very puzzled Hal, who is still wondering where the rumour originated!

W6XJ copied Ch. 0 video at reasonable strength from 0030 to 0100Z on 25-8 . . . HL9WI is now resident in KH6 . . . HL9TG copied by VK6OX at 5 x 9+ on 5'0 MHz 20-8, no signals on 52 MHz . . . SMIRK Party Contest in June brought a surprise certificate to VK5KK for being first for VK5 . . . Thanks to JA1UT, JA1VOK, JE1HYR and VK5AVQ for correspondence on JA 6 metre DX-peditions and new countries with JA donated equipment.

TWO METRES — GENERAL

Quite a large amount of tropo about but few operators on. Sid VK5ME has recently brought back from JA a Belcon 707, a 70 cm multi-mode rig. It works very well. Also the FM321 looks like getting 439 MHz going at last. Recent "DX" on 432 MHz include VK5ME, VK5LP, VK5ZJG and VK5AVQ . . . all from VK5KK and distances up to 35 miles!! Although not concerning 2 metres, Mark VK5AVQ has had an excellent response to the PRC10 info, so far in a month there have been more than 15 requests, including VK2, 3, 4, 5, 6, 7, 8 and P29! (Looks like the column IS read from time to time.—5LP.) PRC10s are popular, and in VK5 they are sometimes used instead of 10 and 20 dollar notes in trades! The best source in the eastern States for units and valves seems to be the two disposals stores in Oxford Street, Sydney. Hopefully some info will be available eventually for the C42s and B47s. Can anyone help?

After that, back to two metres! on 21-8 a reasonable 2m tropo opening occurred to Melbourne area from Adelaide area. First contact to VK3YMY/P at Mt. Macedon, at 1200Z. Steve's location and equipment as per previous times in June. VK3YMY/P worked again at 1257Z, this time 5 x 9. Also worked VK3YFU, Flemington, on 144.12 at 5 x 1, same time. Attempts on 432 MHz by VK5KK unsuccessful at 1330Z and 1410Z. VK3YFU runs 2 x 4CX250B on 432. VK5KK also worked Darryl VK3AQR, Geelong, at 1311Z, peaking 5 x 1. Last signal VK3YMY/P at 1430Z, still 5 x 9. No sign of VK3RTG beacon. Ch. 7 Mt. William only just noise free during the night. Ch. 5 Mt. Macedon just slightly weaker but very consistent. Antenna used 12 elements vertical at 15 feet. No other stations heard both ends. It is interesting to observe UHF CB as an indicator to propagation (tropo). In the country area range is about 30 to 50 miles with 7.5 dBi antenna and fringe stations always take a tremendous lift in signal strength with any useful tropo. It can be useful (more so than 2m FM at VK5KK) watching the stations up to 150 miles away, e.g. Pt. Lincoln, Pt. Augusta and trawlers around Kangaroo Island. It is also quite novel, with the number of amateurs on, to use it for natter nets!

Thanks, David, for filling in the blanks in my information, also to Peter YJ8PD and Gary W6XJ for on-air scraps of information.

CARNARVON ON THE AIR

Andy VK6OX has written to say the "World above 50 MHz" is alive and well in the north-west of WA. He reports the output of the Carnarvon six metre beacon is about 8 watts to an omni-directional antenna, with CW ident. There are hopes for converting to solid state and increasing power output.

On six metres the scene has been quiet there since the sun went north, and no Es either. On 12-8 first JAs were heard weakly on 52 MHz at 0910Z, a CQ on 52.050 brought JH2KKZ at 5 x 9! Then followed JA2DNN and JA2BZY, also 5 x 9. Band closed 0945Z.

On 31-7 Andy and Tony VK6BV at Northam decided to try meteor-scatter in the evening. Skeds ran from 1230 to 1325Z with complete success. As a result of this the Perth boys are now showing an interest, and Andy now runs skeds with Jack VK6ZEL, with others listening.

Andy advises that the VK6 VHFers are running a weekly VHF net on Sunday at 1200Z on 3685 kHz with a good attendance. They are considering moving down into the Novice segment as a number of the Novice boys have Z calls. Anyone from anywhere is welcome to join in.

BRAZIL

Gil VK3AUI sends a copy of a letter received from Rolf PY1RO in Brazil and the following are some extracts from it, dated 17-7. Rolf says he would like to work VK on six metres, but account has to be taken of the fact that even on 10 metres it has only been two years since VK stations were worked after a lapse of many years. Main opening on 10 metres in Brazil occur between 0300 and 0700Z with VK6 occasionally to 1100Z. One problem of course is that 0300Z is midnight in Brazil! However Rolf suggests he is prepared to stay up late if the TV signals indicate right conditions, although the TS820/TV506 combination doesn't allow for readily identifying FM signals. Gil has given Rolf a list of VK TV stations which will help.

Rolf uses a 6 element yagi cut for 50 MHz, and has considerable drop off in gain on 52.050, so will endeavour to look at a new 6 element of more suitable dimensions. The PY1RO beacon runs continuously on 50.003 or 50.004, depending on the ambient temperature of the shack! Rolf has worked all continents except Africa on six metres so he is doing very well. Rolf is also now aware of the 28885 kHz liaison frequency for six metres. His longest contact was to HL9WI over the long path, being about 2000 km more than halfway around the world!

DISTANCE RECORDS

The VHF Advisory Committee have forwarded copies of approved records claimed recently by three recipients as follows: VK2BYX to W6XJ, 7514.059 miles or 12092.691 km, a new VK2 record; VK3OT to XE1GE, 8555.484 miles or 13768.703 km, which constitutes a new VK3 and Australian 6m record; and VK4VC to an unnamed station at 1597.937 miles or 2571.628 km for a new VK4 2m record. Congratulations to all those concerned. Like all records, even VHF records are made to be broken, and the Australian 6 metre record has been broken twice since Steve's good effort, and the claim is being processed, details to be released on confirmation by the VHFAC.

FIJI CONFIRMS

David VK5KK was thrilled to receive a card from 3D2CM for a contact on 52.050 some months ago, being the first contact to VK on 52 MHz since the issuing of the 3D2 prefix. The operator uses a home-brew transverter running 30 watts to a 3 element yagi. David now has confirmed contacts with 15 countries, which is a good effort for someone so far south.

NEW ZEALAND SIX METRES

Via "Break-In" I note Bill ZL2CD in Wellington reports a great thrill to work W6 again after 20 years. Last contact was to W6FZA on 2-11-59, after working more than 100 US stations during 1957-59. On 11-3-79 Bill worked Garry W6XJ on 52.050 at 2045Z with S9 signals after hearing him on 50.1 MHz. Following this he had QSOs with N6CT, N6HZ, WA6BYA, WA6OIB, N6AJ, WB6NMT, K6HAA, N6CW, W6SMS, AA6S, K6BDK and K6ODV (last worked in 1958). Signals were still over S9 at 200Z.

W6XJ reported working ZLs 1AVZ, 1MQ, 1AUM, 2HP, 2BJO, 2BFC, 2BGE, 2CD, 2AQR, 3RW and 3AAN on 11-3. He was also hearing ZL TV Ch. 1 on 50.740, 50.750 and 50.760, plus beacons on 52.500 and 52.510 MHz. Not a bad effort for a morning's work!

SOUTH AFRICA TO GREECE

It has been known for some time that two metre contacts had been made between South Africa and Greece, but further information is to hand from Bill W3XO and "The World above 50 MHz" in QST. Two-way contacts were known to have been made on several occasions between ZS6DN and ZS6LN on the southern end and SV1DH and SV1AB, but the record officially belongs to ZS6DN and SV1AB for spanning a distance of 4419 miles (7127 km). The first contact was made on 13-1-79 and repeated again on 16-1-79. Contacts lasted up to an hour on 144.130 at S3. The CW signals had a hissing sound to them similar to steam or white noise. Very good tape recordings were taken of the contacts. The antenna system at ZS6DN is four 16 element KLM yagis with a measured gain of 19.5 dB and the ERP in the 10 kW range. The antenna at SV1DH is a 16 element with 100 watts.

USA 70 cm WAS

It's been done eventually! W0YZS has completed the first Worked-all-States on 70 cm by taking his portable moonbounce station to the QTH of WA7DKZ and contacting his own station back in Kansas City, operated by K0TLM. Although it doesn't say so, I gather this was achieved via EME contacts, but is still a great achievement and must have taken much painstaking effort.

70 cm SPANS THE PACIFIC

From QST also comes news of the spanning of the Pacific from the US mainland to Hawaii on 432 MHz. Originally this path was conquered on 144 and 220 MHz by W6NLZ and KH6UK, and a 432 MHz attempt by W6FZJ (now W1JR) in August 1973 was almost successful, but thwarted by equipment failure.

After hearing the KH6HME beacon on Mauna Loa beginning about 0000Z 18-7-79, WB6NMT placed a phone call to the islands only to find the operator of the beacon could not make the trip up the mountain for several hours due to work commitments! As the evening wore on, the signal faded and peaked until finally at 0517Z KH6HME, now operating portable from the 5000 ft. level, was being copied in San Diego. Contact was immediately established, first on CW then SSB, for a new terrestrial record, with signals peaking 5 x 7. Thereupon W6YDF, WB6ESQ and WB6WLR up the coast also made the grade. Congratulations are certainly in order here, gentlemen.

BUT WATCH OUT. Graham VK8GB has advised me from Darwin that he is ready to go on 432 MHz using an MMT432/144S transverter feeding into a KLM 432/16LB antenna and it will be pointing north at Japan. If successful, and I don't see why he shouldn't be eventually, the 432 MHz record will come to Australia once more. We will all be waiting to hear the word down here, Graham!

MOONBOUNCE NEWS

From "The Propagator" Lyle VK2ALU reports modifications being made to the 70 cm disc feed of the dual band system to reduce reflected power. It will be good to have the Dapto dish operation on 1296 MHz as well in the future.

ZL2BCG and ZL3AAD have been working on 432 MHz EME system for a year or so, with ZL2BCG being the first to make a contact out of New Zealand on that band, using 16 EYE type yagis, K2RIW type amplifier. ZL3AAD is using 8 of the same type antennae, and similar equipment.

By the way, Dick K2RIW is working on an array of sixteen 19 element yagis for 70 cm! Great Scott, I find it hard enough to keep two large antennae in the air, let alone sixteen of them!

QST reports some very good 70 cm pre-amps have been tested recently. At the North-east VHF/UHF Conference last May a V-244 pre-amp submitted by W1JR produced a noise figure of 0.95 dB, three entries at 1.3 dB, an MSC-8000 submitted by K2UYH, and NEC-64535 jobs by W1GAN and K1LPS. Another K2YUH unit, employing a V-244, was measured at 1.45 dB. Of the 25 pre-amps presented, 17 showed noise figures of less than 2 dB. Things have come a long way in the past few years.

CONCLUSION

By the time you read this we will be halfway through the September-October equinoxial period and will have sampled the good contacts likely to be available as Cycle 21 moves closer to its peak. Another administration overseas which has seen fit to allow limited 6 metre operation is Cyprus, where 5B4AZ has been allocated 50.499 MHz for CW contacts. I note also moves are afoot in New Zealand to try and obtain some concessions for 50 MHz operation — even that country, whilst being permitted to operate down to 51 MHz, realises just how much is being missed through non-compatibility with leading 6 metre countries of the world. Doubts can no longer exist that the MUF on many occasions reaches 50 MHz but does not go on to be usable on 52 MHz. Even the ability for us to be able to go down to 50 MHz legally and ask a station to make a split frequency contact would be some improvement, but the option to make a quick contact on 50 MHz limited to signal reports and exchange of names would be more desirable and would present few if any problems to other users of the 50 MHz part of the spectrum. My only hope is that if something can be done for us in this regard that P. and T. don't leave it until all the DX has faded away, which will probably happen rapidly once the peak has been passed.

Closing with the thought for the month: "One trouble with the world today is that there are too many people in it who are willing to put in their oars but not willing to row."

73. The Voice in the Hills. ■

WARC 1979 AND THE AMATEUR SERVICE IN REGION 3

By D. H. Rankin 9V1RH, Secretary,
IARU Region 3 Asociation,
PO Box 14, Pasir Panjang, Singapore 9111.

By the time you read this, the all important WARC will be under way in Geneva and the fate of amateur radio and other users of the radio spectrum is being determined for the remainder of this century. All will be known by 1st December this year — or at least that is the present intention. The Conference is due to finish on the 30th November, but some observers are forecasting the Conference will have to re-convene some time in early 1980. Nevertheless quite a lot will be known by the end of this year and in the meantime it is important that all amateurs throughout the world be the best possible ambassadors for this unique international activity of amateur radio.

INTRODUCTION

As the ITU settles down to hold the 1979 World Administrative Radio Conference, it has 154 member countries. Of these 99 are located in ITU Region I (Europe and Africa), 28 are in Region II (North, South and Central America) and 27 in Region III (virtually the rest of the world, including Afghanistan, China, Japan and Australasia).

Most, but not all, of the member countries are expected to attend this most important WARC (141 at last count) and again most, but not all, are expected to make written proposals to the ITU containing their requirements for frequency allocations for the remainder of this century. At the time of writing (end July) over eighty countries, including 14 in Region III, had lodged their preliminary written submissions to ITU with some nations putting up several briefs on various subjects of interest to the Union. A single set of documents in one language is estimated to consist of around 7,000 pages at the start of the Conference with a further estimated 12,500 pages being generated during the Conference.

There can therefore be no doubt that this WARC will be one of the biggest on record.

THE AMATEUR SERVICE AND AMATEUR SATELLITE SERVICE

Amateurs will be well represented at WARC. The International Amateur Radio Union — IARU — will be fielding a team of 10-12 Observers, including amateurs from all three ITU/IARU Regions. Some countries will have amateurs in their capacity as amateurs as official members of their Delegation. Australia, New Zealand, Canada, Philippines, USA, United Kingdom, to name a few. Other amateurs will also be part of their countries' Delegation but in their professional capacity as a civil aviation man, or a broadcast man or a defence man, etc.

The IARU commenced preparations for the 1979 WARC some years ago. The Region III Association of IARU was the first to form policies for the WARC back in 1975. And preparations have continued ever since, until now, as the WARC commences the Amateur Service goes into the Conference with the best ever preparation in its history.

For reasons already publicised, the IARU is accepting the present position that the Amateur Service and Amateur Satellite Service are two separate and distinct services, though they are closely inter-related to be sure. But it is hoped that the Amateur Satellite Service will receive more consideration in the frequency bands 1,000 MHz and above. Table 1 and Table 2 show the different bands as proposed by the IARU for both services. These details were promulgated amongst all IARU member societies with the objective of amateurs everywhere presenting a united front to the various national Administrations. The issues to be discussed at the WARC are vast and complex both from an administrative and technical point of view. Many of them do not involve the amateur/amateur satellite service. Even so the ramifications of those matters affecting only the amateurs in all three ITU regions are so large that for the purposes of this article attention will be concentrated principally on those matters affecting frequency allocations in Region 3.

One way to analyse the approach of the various Administrations is band-by-band, looking principally at the Region 3 countries' approach and also the USA because of the US possessions in the Pacific but including as appropriate observations about other countries outside of Region 3 where such observations are of importance. As you read the comments below given for each band, compare the details with those appearing in Tables 1 and 2.

AN ALLOCATION IN THE BAND 160-200 kHz
(Regions 2 and 3 only)

This would appear to be a non-starter as only one Administration in Region 3 has recognised the IARU proposal. Papua New Guinea has proposed one exclusive amateur allocation at 190-200 kHz for Region 3 only.

1800-2000 kHz

At the present time, this band is shared between the Amateur and other services. Individual Administrations have constrained their amateurs to operate in only part of the band. Most Region 3 Administrations propose to maintain the status quo although Papua New Guinea proposes to chop 5 kHz off the top end of the band and allocate 1995-2005 kHz to a new service named "Safety".

Some amateurs in Region 1 countries are permitted to operate on top band by virtue of a footnote (194). A few Region 1 Administrations are now proposing to include the Amateur Service in the Table which would be an upgrading of the Service.

3500-4000 kHz

Again most Region 3 Administrations are not proposing far-reaching changes in this band. Singapore, perhaps following the lead of the United Kingdom, is proposing to give the segment 3500-3615 kHz over to the Maritime Mobile Service on a world-wide basis leaving 3615-3900 to the Amateur Service on the same shared basis as now exists. The Indian proposal of 3500-3900 kHz shared with 3660-3700 exclusive amateur world-wide is particularly interesting in view of the present very restrictive allocation available for Indian amateurs (3890-3900 kHz). Australia too has an interesting submission — they propose to delete footnote 3501/206, which inter alia confines VK amateurs to 3500-3700 kHz. The reason given is as follows:—

"The footnote is no longer required. Subdivision of the band between the allocated services will be made on a national basis."

This proposal reflects the policy of Australia to seek to avoid a proliferation of footnotes.

6800-7300 kHz

No Region 3 Administration has accepted the IARU proposal in full but some have agreed to the band commencing at 6950 kHz. Japan, New Zealand and USA propose that both the Amateur Service and the Amateur Satellite Service be allocated 6950-7100 kHz, whilst the Philippines proposes 7000-7100 kHz for both services. Australia on the other hand proposes that the segment 6950-7000 kHz be allocated to the Amateur Service only with no change in the present 7000-7100 kHz segment.

The top end of the 7 MHz band is coming under great pressure from the Broadcasting Service and it does appear likely that Region 2 amateurs will lose something in this band. The USA proposes that the top end of the band be pulled back to 7250 kHz as also does the Philippines. Many Administrations are proposing that broadcasting is allocated 7100-7300 in Region 2.

This band will, without question, be the subject of much discussion and negotiation at Geneva.

10100-10600 kHz

This is the lowest of the three new HF bands proposed by the IARU and many Administrations have accepted the proposal though not in its entirety. India, New Zealand, Australia, Philippines and Singapore all propose a new band around 10100-10200 kHz although India does suggest commencing the band at 10110 kHz with 10100-10110 kHz being allocated to a new "experimental" service. The Indian proposal does not explain in detail the difference between the Amateur Service and the new experimental service. Papua New Guinea proposes that the band 10100-10300 kHz be allocated to both the Amateur Service and the Amateur Satellite Service, whilst India proposed that 10110-10200 kHz be allocated to the Amateur Satellite Service. The Philippines' proposed emergency amateur frequencies are 10190-10200 kHz. The Peoples Republic of China does not support the introduction of a new Amateur band here.

14000-14500 kHz

No Region III Administration has proposed changes to the existing band. Thus there appears little likelihood of the band being expanded. The only challenge to the Amateur Service/Amateur

Satellite Service comes from Saudi Arabia, who proposes to add fixed and mobile services in the 14250-15350 segment.

18100-18600 kHz
This is another new band proposed by IARU and again many Administrations have reacted favourably although not to the extent of allocating a 500 kHz wide band. Most proposals both within Region III and the other two regions are for a 100 kHz segment at 18068-18168 kHz. Australia, India, New Zealand, Philippines and USA actively support this proposal, with Australia and New Zealand also proposing that the Amateur Satellite Service share. Papua New Guinea proposes that both services use the segment 18300-18500 kHz. Singapore does not support the allocation of a new amateur band here but instead proposes that 18068-18568 kHz be given to the Maritime Mobile service. China, Japan, Korea, Malaysia, Pakistan, Thailand and the Democratic Peoples Republic of Korea have not made submissions on this part of the spectrum.

20950-21000 kHz
To date there have been no proposals threatening a reduction in this band. On the contrary a number of countries have proposed that the band be extended down 50 kHz to 20950 kHz. Both New Zealand and USA propose this for both the Amateur Service and the Amateur Satellite Service.

The Philippines emergency frequencies proposed are 21440-21450 kHz.

24000-24500 kHz
The last of the three new HF bands proposed by IARU has not received quite so much support by Region 3 Administrations as the two lower bands. Australia and New Zealand have proposed the segment 24150-24350 kHz for both the Amateur Service and the Amateur Satellite Service, whilst Philippines and USA propose 25110 to 25210 kHz for both services. Papua New Guinea offers 24500-24990 kHz for both services. Indonesia wishes the status quo to be retained, whilst all other Region 3 countries make no submission at all on this band.

The Philippines emergency segment is proposed as 25200-25210 kHz.

A similar confused situation exists with the proposals from the countries of the other two regions. This is another band which will come in for a fair amount of discussion and negotiation during the Conference.

28000-29700 kHz
No country world-wide to date has proposed to take any of this band from the Amateur Service or Amateur Satellite Service. China does propose to add the mobile service as a secondary allocation in this band but no other Administration has to date supported this proposal.

50-54 MHz
India proposes to delete the Amateur Service in Region 3 from this band to allow the introduction of another 7 MHz wide television channel (47-54 MHz). However, a number of countries in other regions are recommending that television be not used in this frequency band because of periodic long distance propagation problems and as a consequence the subject will be up for discussion during the WARC. Both China and the Democratic Peoples Republic of Korea propose to leave the Amateur Service in Region 3 on a primary basis but to add in Broadcasting Service by way of a footnote. Malaysia proposes to add Fixed and Mobile Services on a primary basis along with the Amateur Service. Indonesia and USA propose to retain the existing allocations unaltered, whilst Australia wishes to retain the Amateur Service as primary but with a modified footnote (3544/246) that reads as follows:—

"In Australia, the band 50-54 MHz is also allocated to the broadcasting service. Reason: To retain the allocation for the amateur service."

New Zealand offers no submissions on this band in its brief.

A most interesting proposal is put up by Norway, which reads as follows:—

"When the broadcasting service ceases operation in the band 47-68 MHz, the amateur service should be permitted to use exclusive segment or segments in the band 50-54 MHz, preferably 50-50.5 MHz. Reason: As this band is a suitable and interesting band for the amateur service, it should in the long term obtain a minor segment."

It would indeed be a move acceptable to all amateurs interested in VHF if a world-wide segment around 50-50.5 MHz were to be allocated to the amateur service.

144.0-148.0 MHz
This band is coming under great pressure from most of the Asian Administrations in Region III with the fixed and mobile services being the intended beneficiaries. To simplify the discussion consider first the segment 144.0-146.0 MHz and then 146.0-148.0 MHz.

144 0-146.0 MHz
Australia, India, Japan, Malaysia, New Zealand, Korea, Pakistan, Papua New Guinea, Philippines, Thailand and USA do not submit proposal on this segment.

China wishes to add a new footnote that permits her to allow aeronautical mobiles to operate in this band, whilst Singapore wishes to add fixed and mobile services on a secondary basis. There is a potential interference problem in that Singapore proposes to have both the Amateur and Amateur Satellite Service on a primary basis in this same segment.

146.0-148.0 MHz
This is the segment of the band that is under heavy attack. Japan, Korea and Thailand propose to delete the Amateur Service from the Table in this segment, whilst India, Philippines, Indonesia and Singapore propose to add either directly into the Table or by footnote, sharing with the fixed and mobile services.

Australia and Papua New Guinea make no proposals in this segment, whilst New Zealand and USA wish to maintain the status quo.

Thus it appears highly likely that the Amateur Service in Region 3 could lose the top two megahertz of the band and that if they wish to protect the interests of their Amateurs, Australia and New Zealand could possibly have appropriate footnotes added into the Radio Regulations.

220-225 MHz
Insofar as Region 3 is concerned, this band would appear to be beyond reach. The only Administration proposing a Region 3 allocation is Papua New Guinea and the band proposed is 230-235 MHz. Australia, China, Democratic Peoples Republic of Korea, India, Malaysia, New Zealand, Philippines, Singapore, Indonesia and USA all refused to accept the IARU proposal of 220-225 MHz world-wide exclusive for the Amateur Service and the Amateur Satellite Service.

420-450 MHz
This is another band under heavy attack in Region 3. New Zealand, whilst proposing to cut out 10 MHz (420-430 MHz), proposes to allocate 610-620 MHz for NZ amateurs in lieu. Papua New Guinea also proposes to delete the bottom 10 MHz from the band but offers no other allocation in its place.

The following countries propose to include fixed and mobile services into this band either by direct entry into the Table or by footnote:—India, Japan (mobile only), Singapore, Korea, Philippines, Thailand, Indonesia, Malaysia.

However, Malaysia also proposes to upgrade the Amateur Service to primary.

Australia, Pakistan and USA make no proposals about this band.

The Amateur Satellite Service is presently allowed to use the segment 435-438 MHz, through footnote 3644/320A. No Administration has proposed to change this to delete the 435-438 MHz segment, which is encouraging.

However, the pressure to admit fixed and mobile services into this band is strong and if the move is successful it would be to the detriment of the Amateur Service.

902-928 MHz
This proposed new band has not received support from any of the Region 3 Administrations to date. The Philippines have not made any proposal on this segment and the USA proposes that the band 902-928 MHz be made available to the Amateur Service in Region 2 only.

Insofar as Region 3 is concerned, it would seem most unlikely that an amateur band will be allocated in this range.

1215-1300 MHz
There are strong moves to take the bottom of this band (1215-1240 MHz) from the Amateur Service for the new Radionavigation Satellite Service.

Australia makes no proposals at all, whilst New Zealand, Philippines and USA propose 1240-1300 MHz for the Amateur Service. New Zealand and Papua New Guinea further propose 1290-1300 MHz for the Amateur Satellite Service, NZ by footnote (3644/320A) and PNG by direct entry into the Table. However, the Philippines and USA propose by footnote, the segment 1250-1260 MHz for the Satellite Service.

Indonesia and Japan propose that the existing allocation remain whilst other Region 3 countries make no proposals at all.

The important thing for amateurs here is that the Amateur Satellite Service achieves some form of allocation to allow future OSCAR-RS experiments in this frequency band.

2300-2450 MHz
The IARU some years ago had already identified that the requirement for the segment 2300-2310 MHz was already absolutely essential. Both Australia and New Guinea accepted this proposal and both countries propose the segment as requested. They also proposed that the remainder of the band 2310-2450 MHz should remain as is. New Zealand, on the other hand, proposes to leave the entire existing allocation but allow the Amateur Satellite Service to use the entire band via a footnote. This would be on a shared and non-interfering basis.

The Philippines and the USA both take a similar approach to New Zealand but their proposed footnote restricts the Satellite Service to the segment 2390-2450 MHz.

The other countries in Region 3 made no proposals about this band.

3300-3500 MHz
Insofar as the amateurs are concerned, China, Democratic Peoples Republic of Korea, India, the Philippines, Singapore and USA propose no changes in this band.

Australia proposes that the Amateur Satellite Service be allocated the segment 3400-3410 MHz on a non-interference basis (footnote 3739A). Otherwise no change. Papua New Guinea proposes that the band be changed on a world-wide basis and that it becomes 3100-3400 MHz for both services but that the satellite traffic be in earth-to-space direction only.

New Zealand wants the band to remain as is, but by footnote allow the satellite service to share 3400-3500 MHz on a non-interference basis.

5650-5925 MHz
The present allocation in Regions 1 and 3 is 5650-5850 MHz but IARU proposed that the upper limit become 5925 MHz in all three regions. However, there was no support for this proposition amongst any of the Region 3 Administrations. Korea, Malaysia, Pakistan, Singapore, Democratic Peoples Republic of Korea, and Thailand made no submission on this band, while China, India and Papua New Guinea specified no changes insofar as amateurs are concerned.

The Philippines, Japan and USA propose that both services share 5650-5670 on a secondary and non-interference basis (footnote 3644/320A) with the Amateur Service also allocated 5670 to 5850 on a shared secondary basis.

Australia has a similar proposal except that a different footnote reference is used.

Indonesia proposed no changes to the segment 5650-5725 MHz and did not submit proposal to cover 5725-5850 MHz. New Zealand proposes to use footnote 3644/320A to permit the Amtaeur Satellite Service to use the segment 5650-5670 MHz and makes no submissions regarding the rest of the band.

It does appear as if the Amateur Service in Region 3 can expect to retain 5650-5850 MHz and that the Amateur Satellite Service will be allocated 5650-5670 MHz.

10.0-10.05 GHz

Most Administrations have either made no proposals or proposed no change for this band.

Australia and Papua New Guinea propose an amateur satellite band, whilst New Zealand proposes that the entire band be made available to both services (that ubiquitous 3644/320A footnote again).

Japan and the USA do not propose an allocation here for the Satellite Service.

24 0-24.25 GHz

Only three Administrations put forward proposals concerning this band. Australia, Philippines and USA wished to maintain the status quo. Consequently there does not appear to be any threat to amateur interests in this band.

FREQUENCIES ABOVE 40 GHz

The proposals for frequency bands put forward by IARU are at present unallocated in the ITU Frequency Table. Eight of the Administrations in Region 3 have not made submissions covering these frequencies. The Peoples Republic of China has, but does not propose any amateur bands at all. Australia has not proposed any amateur bands either, but has instead proposed that the bands 155-160 GHz and 240-250 be designated "experimental" to allow investigations to proceed without making service allocations.

Pakistan has not made any allowance for the Amateur Satellite Service but has proposed 71-84 GHz, 152-170 GHz and 240-250 GHz for the Amateur Service on a primary, world-wide exclusive basis. New Zealand, on the other hand, proposes that the Amateur Service be secondary and shared on 48.0-50.0 GHz with the Amateur Satellite Service being permitted by footnote on a non-interference basis.

For 71-84 GHz, 165-170 GHz and 240-250 GHz, New Zealand proposes exclusive world-wide use by both services.

The Philippines and USA have, insofar as the Amateur Service and Amateur Satellite Service are concerned, identical proposals, viz., 49.8-50.0 GHz world-wide exclusive both services; 76-81 GHz, 165-170 GHz and 240-250 GHz Amateur Service shared as secondary service with the Amateur Satellite Service permitted on a non-interference basis (footnote 3644/320A).

Japan, the only other Region 3 nation to make proposals in these frequency bands, submitted the following:—49.5-50 GHz, Amateur and Amateur Satellite on a primary shared basis; 72-76 GHz, 166-170 GHz and 240-250 GHz, both services on a secondary shared basis.

No doubt there is again plenty of scope for discussion during the WARC.

GENERAL

Amateurs in both Australia and New Zealand are fortunate in that their Administrations have a high regard for the Amateur Service and also that their national societies have good working relationships with their respective Administrations. This high regard is exemplified by the following. A form of activity that requires a large transmission bandwidth is colour television (fast scan) and the lowest band on which amateurs may conduct such experiments is 420-450 MHz. Because of sharing and other problems the New Zealand Administration is proposing to write a footnote into the Table purely for New Zealand amateurs that will allow them the use of the band 610-620 MHz. This will be on a shared basis.

In Australia, the band 576-585 MHz is available to amateurs on a temporary basis.

With two low frequency VHF bands at their disposal, it is expected that there will be an increase in activity by amateurs interested in colour TV experiments involving repeaters.

CONCLUSION

It is the purpose of this article to outline the preparatory information on the WARC insofar as it affects the Amateur and Amateur Satellite Services and show that the matters involved are highly complex and technical and that if national and international politics also come into the picture then the whole matter will become just that more complicated.

As stated earlier, the IARU has never been better prepared for WARC. The value of putting up a consolidated position paper for the consideration and adoption of national societies is obvious. One only has to look through the various country submissions to see which societies approached their licensing authorities. Some were more successful than others but it does appear that no country having an active national amateur society failed to impress on its government the importance of the amateur cause.

Publicity about the 1979 WARC in almost all amateur journals has been extensive. Individual amateurs who don't know what is going on only have themselves to blame. Most of the active, national societies in Region 3 have a designated IARU Liaison Officer who has most, if not all, pertinent information for amateurs on WARC in his possession. Information is also available from the IARU headquarters in Newington, Connecticut, USA, and from the Regional Secretariat in Singapore. This article has concentrated on the submissions and attitudes of the various member countries of Region 3. More information on the approaches in Regions 1 and 2 can be obtained from the official journal of the IARU — QST. In particular the July and August 1979 issues contain excellent summaries written by Dave Sumner K1ZZ of IARU headquarters.

Australian amateurs have every reason to be proud of and grateful to those dedicated amateurs who have worked so hard over recent years to promote the amateur cause to the authorities. The Australian proposals to the Conference do support many of the requests put forward by the IARU. However, it must be borne in mind that other services have a claim on the radio spectrum and the allocation splits will be by negotiation and agreement. Amateurs may therefore not get all that they want — never again 200 metres and down — but the IARU Observer Team and amateur representatives on the various national delegations will ensure that the amateur requirement is properly presented.

TABLE 1

New Amateur Service Frequency Bands for Regions 2 and 3 as proposed by IARU.

An allocation within the segment 160-200 kHz.

1800- 2000 kHz	420- 450 MHz
3500- 4000 ,,	902- 928 ,,
6800- 7300 ,,	1215- 1300 ,,
10100-10600 ,,	2300- 2450 ,,
14000-14500 ,,	3300- 3500 ,,
18100-18600 ,,	5650- 5925 ,,
21000-21500 ,,	10000-10500 ,,
24000-24500 ,,	24000-24250 ,,
28000-29700 ,,	48- 50 GHz
50- 54 MHz	71- 76 ,,
144- 148 ,,	155- 160 ,,
220- 225 ,,	240- 250 ,,

All non-allocated frequencies above 275 GHz.

TABLE 2

Amateur Satellite Service Frequency Bands as proposed by IARU for World-Wide Allocation.

7000- 7100 kHz	1290- 1300 MHz
10100-10600 ,,	2300- 2310 ,,
14000-14250 ,,	3400- 3410 ,,
18100-18600 ,,	5650- 5670 ,,
21000-21450 ,,	10475-10500 ,,
24000-24500 ,,	24000-24050 ,,
28000-29700 ,,	48- 50 GHz
144- 146 MHz	71- 76 ,,
220- 225 ,,	155- 160 ,,
435- 438 ,,	240- 250 ,,

All non-allocated frequencies above 275 GHz.

■

QSP

CW FOR THE DEAF

June 1979 QST contains a short article describing how an old loudspeaker can easily be modified to enable a deaf (and blind) amateur to read morse by carefully removing the cone but leaving behind the dust cap, spider and input lead connectors. A half table tennis ball glued on to the dome allows the operator to feel the vibrations which, even at full volume, are almost inaudible. ■

MAGPUBS

OVERSEAS MAGAZINE SUBSCRIPTIONS

(one year only)

QST	$19.00
Radio Communications	$19.00
Break-In	$12.00
Ham Radio	$15.50
CQ	$8.00
73	$23.50
CQ-TV	$5.50
VHF Communications	
Surface	$8.20
Airmail	$12.40

(Most back issues available, from 1970)

AMATEUR RADIO
Overseas surface mail subscriptions $9.60

WRITE TO:

MAGPUBS

P.O. BOX 150,
TOORAK, VIC., 3142

If you are reading this issue but are not a member of the WIA and if you would like to receive AR every month for your own personal use and future record —

Would you like to join the WIA now?

Please write to the

WIA,
P.O. Box 150,
Toorak, Vic. 3142
for details of how to join.

QSP

SATELLITE PROBLEMS

Did you know that satellites have experienced difficulties with the build-up and discharge of static electricity? In rare instances such arcing and sparking has knocked some satellites out of operation.—Telecommunications Journal June 1979

COMPUTERISED 2 METRE FM RIG

NDI HC 1400

HC-1400

Microprocessor controlled
PLL circuitry
Repeater Offset
Tone Burst
800 Channels with 5KHz
Spacing 144-148MHz
3 Memory channels
LED Displays both TX &
RX frequencies
***25 Watts** Power Output (5 watts on Low)*

ALL FOR ONLY **$399**

MOST YAESU HF PRODUCTS IN STOCK

SPECIAL FT101E's with fan, DC-DC converter & mic for only **$829.00** **(no hidden price extras)**

IMARK **Pty. Ltd., 167 Roden St., West Melbourne, Vic. 3003**
Phone (03) 329 5433

Available in South Australia from — Watson Communications, 75 Prospect Rd., Prospect. S. A. 5082 Phone (08) 2694744

TASMANIAN AMATEUR RADIO CONVENTION

17th to 18th November 1979

Held at the Matric College in Alanvale Rd., Launceston.

For Registration Forms or further details, write to:

TARC 79 COMMITTEE

P.O. Box 275, Launceston, Tasmania 7250

Please advise if you need assistance with accommodation.

TO COMPLEMENT OUR USUAL RANGE OF CRYSTALS

BRIGHT STAR CRYSTALS PTY. LTD.

35 EILEEN ROAD, CLAYTON, VIC., 3168
Phone: 546 5076 (Area Code 03)
Telex: AA 36004

CAN SUPPLY A RANGE OF —

- OSCILLATORS
- WIDE-BAND AMPLIFIERS
- TTL & CMOS DECADE COUNTERS
- ELECTRONIC CRYSTAL OVENS

INTERSTATE AGENTS:

Adelaide: ROGERS ELECTRONICS — Phone 42 6666
Brisbane: FRED HOE & SONS PTY. LTD — Phone 47 4311
Perth: WESTEST — Phone 337 6393
Hobart: DILMOND INSTRUMENTS — Phone 47 9077
All Mail to be addressed to: P.O. BOX 42, SPRINGVALE 3171

DONT FORGET: Dick Smith will match any genuine price on Yaesu amateur gear!

DON'T MISS OUT!

6 metres is coming alive . . .

NOW IS THE TIME to chase the 6 metre DX – as the sunspot cycle nears its peak. And what better way to get into the action than with Yaesu from Dick

Cat D-2886

$795.00

$6.00 Road Freight Anywhere in Australia

INTRODUCING: The Yaesu FT-625R All Mode 6 Metre Transceiver.

Designed for today's demanding 6 metre operator. 25 watts output (SSB/CW/FM) with inbuilt AC & DC power supplies. Automatic mic gain control, built in noise blanker, variable power output, RF speech processor – a truly magnificent transceiver. And because it's a Yaesu, it is quality through and through. Quality fully backed by Dick Smith's fully equipped service centre. Call in today and have a test drive of this magnificent unit!

- SSB, CW, AM & FM OPERATION
- 50 TO 54MHz coverage (listen in to W/K, JA & ZL frequencies)
- 0.5uV sensitivity SSB; 0.35uV FM & 1uV AM
- AC & DC supplies inbuilt
- 3-way metering: S meter; relative power o/p & disc. centre meter.

We welcome bankcard or offer easy terms with BFC FINANCE LIMITED

HOW ABOUT SOMETHING FOR THE HF BANDS?

Here it is: Yaesu's new up-graded and up-rated FT-7B. Built for today's demanding amateur operator.

Yes, the famous Yaesu FT-7 has had a facelift. Now with:

- AM operation too (previously only SSB & CW)
- 100 watts output (SSB & CW)
- Provision for full 10 metre band in 4 switched segments

Whether you want an HF transceiver for base or mobile use, you can't go past the brilliant Yaesu FT-7B. Many thousands of its predecessor, the FT7, are in continuous use throughout Australia (and the world)! Now you can have the very latest in solid state transceivers working for YOU. Small size and light weight make it a favourite for active amateurs. Call in to any Dick Smith store and check out this superb transceiver soon. You won't be disappointed!

Cat D-2868

$649.00

$6.00 Road Freight anywhere in Australia

YAESU MOBILE ANTENNAS

The greatest mobile system you'll find: Buy the gutter mount base and 2 metre stub and you're on the air immediately on 2 metres. Then as you need them, buy the whips for the HF bands you want to operate on. It's that simple. Now there's no excuse not to go mobile. It's easy with Dick Smith and Yaesu!

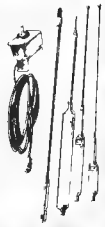

RSE-2-M	RSE-2A	RSL-145	RSL-3 5	RSL-7	RSL-14	RSL-21	RSL-28
Gutter Mount	2 metre stub	6 & 2 metre antenna	80 metre antenna	40 metre antenna	20 metre antenna	15 metre antenna	10 metre antenna
Cat D-4100	Cat D-4102	Cat D 4104	Cat D-4110	Cat D-4112	Cat D-4114	Cat D-4116	Cat D-4118
$32 50	$10 95	$23 95	$19 95	$19 95	$20 95	$20 95	$20 95

DICK SMITH ELECTRONICS

NSW	125 York Street, SYDNEY. Phone 290 3377	ACT	96-98 Gladstone Street, FYSHWICK. Phone 80 4944
	147 Hume Highway, CHULLORA. Phone 642 8922	VIC	399 Lonsdale Street, MELBOURNE. Phone 67 9834
	162 Pacific Highway, GORE HILL. Phone 439 5311		656 Bridge Road, RICHMOND. Phone 428 1614
	30 Grose Street, PARRAMATTA. Phone 683 1133	QLD	166 Logan Road, BURANDA. Phone 391 6233
		SA	203 Wright Street, ADELAIDE. Phone 212 1962
	263 Keira Street, WOLLONGONG Phone 28 3800	WA	414 William Street, PERTH. Phone 328 6944

EXCEPT WHERE NOTED, ALL ITEMS SHOWN IN STOCK AT PRICES GIVEN AT TIME OF GOING TO PRESS

MAIL ORDER CENTRE: PO Box 747, CROWS NEST NSW 2065. Ph 439 5311. PACK & POST EXTRA.

bankcard welcome here

SHOPS OPEN 9AM to 5.30PM (Saturday: 9am till 12 noon) BRISBANE: Half hour earlier. ANY TERMS OFFERED ARE TO APPROVED APPLICANTS ONLY

RE-SELLERS OF DICK SMITH PRODUCTS IN MOST AREAS OF AUSTRALIA.

ANNOUNCING

CW ELECTRONICS

QUEENSLAND'S NEWEST SHOP WHICH WILL
CATER SOLELY FOR THE AMATEUR RADIO ENTHUSIAST.
BY THE AMATEUR RADIO ENTHUSIASTS.
WE HAVE OPENED

AT

The Corner of MARSHALL RD. & CHAMBERLAIN STREET,
TARRAGINDI. TELEPHONE No. (07) 48 6601
P.O. BOX 274 SUNNYBANK, QLD. 4109

WE WILL STOCK AND PROVIDE COMPLETE SERVICE FOR:

ICOM — LEADER TEST EQUIPMENT
COMMODORE "PET" — YAESU — DAIWA
KENWOOD — TONO RTTY EQUIPMENT — HY-GAIN
TEN-TEC — JAYBEAM — PALOMAR ETC.

AMATEUR RADIO ACTION

IS THE NEW GENERATION AMATEUR MAGAZINE

SUBSCRIBE NOW!

DON'T MISS OUT on your copy of Amateur Radio Action. There's only one way to be really sure that you will receive each and every copy of Amateur Radio Action — and that's by enrolling on our subscription lists. And it won't cost you any more than buying one at the newsagent. That's right, we are offering 12 issues for only $12 post free.

Simply fill out the coupon below, enclose a cheque/money order/postal order for $12 and you will be put on our subscription list to receive the next 12 copies of AMATEUR RADIO ACTION through the post.

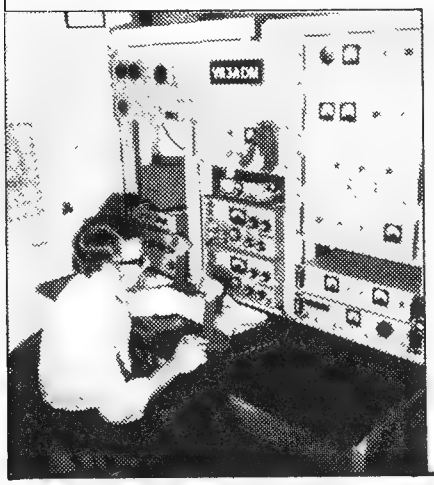

Please put me down for 12 editions of Amateur Radio Action, starting NOW!
RATES: Within Australia and surface mail overseas: $12.00
Air mail to New Zealand and Papua New Guinea: $A29.40
Air Mail to USA and Europe: $A46.20
Herewith enclosed cheque/postal note/money order to the value of: $ .....
Name .....
Address .....
..... Postcode .....
Post to: Amateur Radio Action Subscriptions, Box 628E, Melbourne 3001.

NOW THE FM321

70cm amateur rig

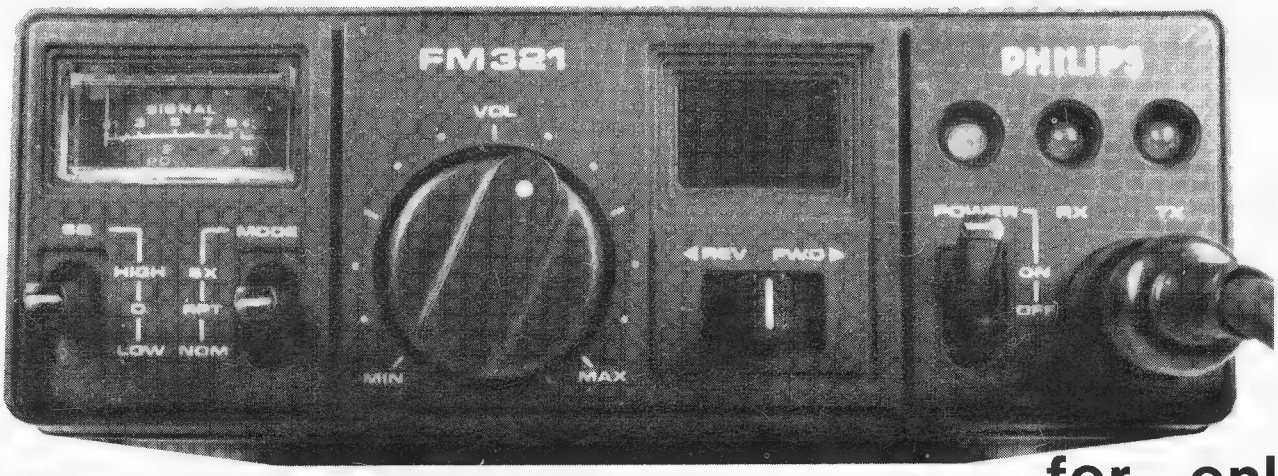

40 channels fully synthesised Australian designed & made

for only

$299*

Check these features:

- 40 synthesized channels with electronic channel change and LED readout.
- Channel selection up or down from front panel or hand microphone.
- A LED each for power on, transmit and receive.
- 5 Watts RF and 1 Watt audio power.
- Combined signal strength and RF power meter.
- Single or two frequency simplex operation on any of the 40 channels.
- Instant selection of these modes plus any one nominated repeater channel.
- 5MHz Tx/Rx separation on repeater mode.
- PL259 antenna socket.
- 6 pole crystal filter combination for improved selectivity.
- High sensitivity

SPECIFICATION: TYPICAL DATA AT 22°C 13·8V

Frequency Range: Tx433.025MHz to 434.000MHz & 438.025MHz to 439.000MHz
Rx438.025MHz to 439.000MHz

Frequency Stability: Better than 6ppm 0°C to +60°C

Supply Voltage: 11 to 16.2 Volts -Ve earth.

TRANSMITTER

Power Output: 5 watts

Spurious Outputs: -63dB (out of band)

Audio Response: 6dB/octave pre-emphasis 300Hz to 2KHz.

RECEIVER

Audio Output: >1.0 Watt at 10% THD into 8Ω

Selectivity: >50dB at ±25KHz

Sensitivity: 0.3μVpd (12dB SINAD)

Please send me an FM321 by registered mail.

To: Philips-TMC (Radio Division)
P.O. Box 105,
CLAYTON, Victoria. 3168.

Name ..... Address .....

..... State .... Postcode .....

Call Sign .....

Cheque No/Money Order No. ..... Is enclosed for

$ .....

or

Please debit my Bankcard No .....

Expiry Date .....

for $ ..... Signature .....

* Add $4.00 for packing and postage.

PHILIPS

BOOK REVIEW

THE ARRL ANTENNA ANTHOLOGY
Reviewed by VK3AUI.

As the title says, this is a selection of antenna articles originally published in QST. The antennas described range from midgets to monsters and construction, as shown in the photographs, covers the range of miracles of machine shop to a miracle that it worked.

Various beams and verticals which have enjoyed some popularity are described. The range from 80 metre monsters to small verticals. Some of them will no doubt have the answer to your antenna problem.

The major criticism is that the book lacks a Bill Orr to tie it all together. However for all that it still provides a most interesting collection of antennas.

Definitely a book that you shold thumb through before buying. It does not set out to be an A to Z of antennas but it does provide a very convenient grouping of recent popular antenna articles from QST.

Available from Magpubs or your favourite bookshop. ■

THE RADIO AMATEUR'S LICENCE MANUAL — 77th EDITION ARRL
Reviewed by VK3AUI.

This publication is a comprehensive manual for all grades of licence in the United States of America. The amateur rules and regulations applicable in the USA are set out in full, together with sample questions and an outline of the scope of the syllabus for each class of examination.

Both the Novice and General Class theory sections have relevance to the Australian scene. The wording of some questions may be different locally but the sections are of considerable use locally.

Regulations are different and in particular the morse requirements are totally different. The regulations and theory are examined in one combined paper. The morse is examined as a comprehensive test which is marked on the answers to a multiple choice question sheet based on the text sent.

Some interesting points emerge from the new regulations and licensing and call sign structure.

The first point is that in many centres **examinations are held weekly in the USA** and they are marked on the spot and a **result given on the spot.** This is one area in which P. and T. could learn something but maybe we will never have the American system, which grew out of a need to save staff caused by the elimination of licence fees and the decimation of FCC funding. Messrs. Fraser and Staley please note this new way to save funds.

The second point is that you may immediately be upgraded by the use of a code letter group pending the updating of FCC records. This may or may not involve a call sign change at your request. If you wish you may upgrade from Novice to Extra with the same call sign. The need for the identifier is only until FCC computer records are updated.

The third point is that in the USA there is no grade of licence which is code free. All grades of licence have a code requirement and have HF operating privileges. This is in sharp contrast to the bleating of those locals who are too lazy to learn the code.

The code speeds are 5 words per minute for Novice and Technician Classes. For General and Advanced Classes the code speed is 13 words per minute, whilst for the Extra Class the code speed is 20 words per minute.

The Advanced Class and the Extra Class theory are exactly what the names imply. The General and Technician Class have the same standard of theory.

The Novice Class has an interesting set-up for examination in that it may be taken at home using a volunteer examiner with a higher grade licence. Now that's an innovation for you.

The final interesting point is that, notwithstanding reciprocal licences, anyone can take a 747 flight and stroll into an FCC office and walk out with any licence, even an Extra Class licence, which they may then hold for as long as they keep on renewing it every five years. But remember, there are no renewal notices as the FCC has no funds for such frills. This is a most interesting possibility for anyone who travels and wants to be able to take out a top grade licence anywhere in the world.

A most interesting book for anyone needing a bit of extra pre-exam material or for anyone who has an interest in the US licence structure. There is even an explanation of the call sign structure. It is also a must for the travelling ham. Finally, it is a definite must for P. and T., for if they don't learn from it the Minister certainly could when it comes to departmental efficiency and cost cutting.

Available from Magpubs or your favourite bookshop. ■

INTRUDER WATCH

Alf Chandler, VK3LC

QRM TO P29JS — BEWARE

Through the vigilance of the International Intruder Watch Organisation an E18 station operator in Ireland who has been causing harmful interference to the P29JS DX net on 14220 kHz and other nets has had his licence revoked and his gear put on the disposal market.

We are also aware that other operators, and in VK and ZL, are causing the same type of QRM. One amateur has been identified in ZL, and the whistling crank in VK has been tracked to his area. It is only a matter of time when he will be caught.

Let me here warn anybody causing deliberate harmful interference to watch out. Cross bearings are easy to obtain and our Administration will take action.

Although this operation is not strictly an Intruder Watch matter, we are the only organisation equipped with the necessary know-how to combat these insidious operators. And we shall.

Alf Chandler VK3LC,
Federal IW Co-ordinator. ■

INTERNATIONAL NEWS

SRI LANKA "TRAIN THE TRAINERS" COURSE

The success of the training course on electronics and amateur radio in Sri Lanka last October (see AR December 1978, page 75) has prompted DARC to plan a follow-up course in February/March 1980 for two weeks in Colombo for up to 15 students from national IARU Societies in Region 3. The course will supply solid knowledge on how to prepare local training courses, how to test suitable applicants, how to prepare the paperwork and material, how to check progress by interim tests, etc. Students would be nominated via national societies and only travel expenses and pocket money will be required. Qualifications:—must be licensed radio amateur, possibly with tutoring experience, good command of English and general know-how to follow such a course. Anyone interested should write to Mr. David Rankin, IARU R3 Secretary, PO Box 14, Pasir Panjang, Singapore 9111.

RECIPROCAL LICENSING

The address of the Belgian authority is:—M. le Directeur General, Regie TT-CNS, 31e etage-Tour Madou, Place Madou 1, 1030 Brussels. ■

TECHNICAL CORRESPONDENCE

The Editor,
Dear Sir,

ERRATA — 2m FM SYNTHESISER — AUGUST 1979 AR

1. **For page 9:** Table 1, programme codes. Programme code for Ch. 61 on Tx should be "2941" and not "1941".
2. **For Fig. 2B:** Coil details: these are missing the number of turns, etc. They should be as follows:
   L1: 100 turns, 36 swg scramble wound on neosid former between a couple of ¼ in. diameter toroids. Secondary is 10 turns over bottom of L1 and same gauge. Slug is F16.
   L2: 40 turns 36 swg close wound on neosid former. Toroids not used. Slug is F16.
   L3: 60 turns 36 swg tapped 15 turns from earth end. Slug is F16.
   L4: 45 turns as per L3 tapped at 10 turns from supply end. Slug is F16.
   L5: 30 turns 28 swg. Secondary is 6 turns over bottom of L5. Slug is F16.

For using tripler at 34 MHz alter above details for L3, L4 and L5 as follows:

L3 becomes L6: 37 turns 28 swg tapped 8 turns from earth end. C = 33 pF.

L4 becomes L7: 20 turns 28 swg tapped 6 turns from supply end. Slug is F29. C1 equals 10 pF, C2 = 4.7 pF.

L5 becomes L8: 20 turns 28 swg. Secondary is 6 turns over bottom of L8. C = 10 pF.

3. **For Fig. 3:**
   A. IC10 and IC11 should be MC14560B not MC145608.
   B. Pin 9 of IC10 should go to pin 7 of IC11. Pin 7 of IC11 should not go to earth.
   C. Pin numbers on IC5 missing. They are as follows:

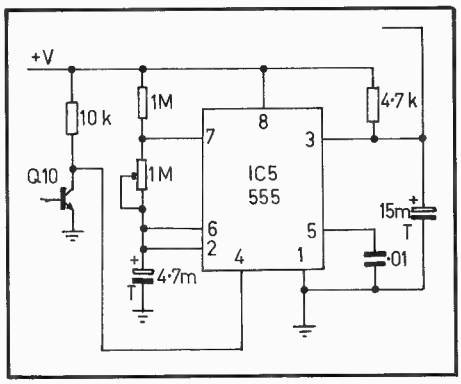

4. **For page 12:**
   Text at bottom of page 12, last column, last paragraph, should read: . . . the counter resets on the count of 41 via IC12A . . .

For Fig. 5, page 13:
For Mode Switch:
Pos. 1 = + 600 kHz Tx.
Pos. 2 = Simplex.
Pos. 3 = —600 kHz Tx.
Pos. 4 = —600 kHz Rx (reverse rept.).

For Fig. 6, page 14:
△f pot should have 270 ohm resistor between bottom of pot and earth.

For page 17:
Mode Switch (see Fig. 3) (not "see Fig. 5").

L. De Stefano VK3AQZ. ■

SUPPORT OUR ADVERTISERS

IONOSPHERIC PREDICTIONS

Len Poynter VK3ZGP/NAC

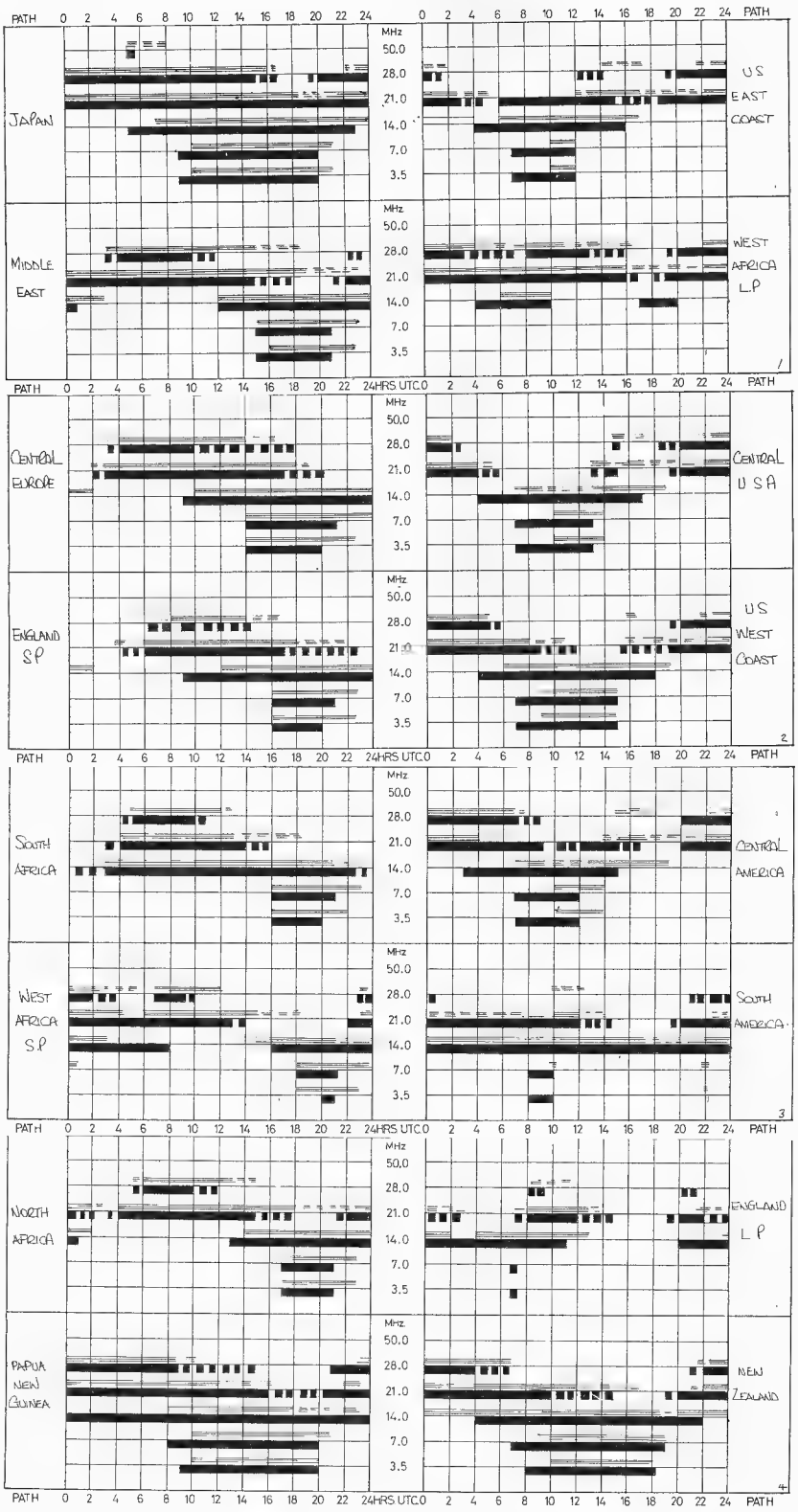

LEGEND

FROM WESTERN AUSTRALIA

FROM EASTERN AUSTRALIA

BETTER THAN 50% OF THE MONTH, BUT NOT EVERYDAY

LESS THAN 50% OF THE MONTH

PREDICTIONS COURTESY IPS SYDNEY

ALL TIMES UNIVERSAL UTC (GMT)

EDITOR'S NOTE:

Due to illness Len Poynter was unable to prepare this month's chart, and we have reproduced last month's chart as a guide to band openings.

We wish Len a speedy recovery — (VK3UV).

YOU and DX

Mike Bazley VK6HD

8 James Road, Kalamunda W.A. 6076

At the time this is being written Spring is just around the corner. Spring, the time when a "young" man's thoughts turn to the ten metre band! Once again ten will be staying open until the late hours with DX opportunities into all areas of the world. Some of our newly licensed fellow amateurs may not be aware of the activity that takes place on ten metres, even during sunspot minima. I'm referring to those ten metre beacons which have been helpful in the past by pinpointing openings and which are still active. It would be appreciated by all if these beacons could be given a clear frequency. The following information is supplied by G3DME through the RSGB's "Rad Com".

28,175	kHz	VE3TEN, Ottawa, Canada.
28,200	kHz	Common frequency.
28,205	kHz	DL0IGI (Mt. Predightstuhl, near Salzburg). Moves to 28, 200 kHz between hour and hour plus 5 min. and hour plus 30 and plus 35.
28,207.5	kHz	N4RD, Englewood, Fla. Non-operational?
28,210	kHz	3B8MS, Signal Mount, Mauritius.
28,215	kHz	GB3SX, Crowborough.
28,217.5	kHz	VK2WI, Sydney, Australia.
28,220	kHz	5B4CY, Limassol, Cyprus.
28,225	kHz	(Reserved for VE3TEN.)
28,230	kHz	ZL2MHF, Mt. Climie, New Zealand.
28,235	kHz	VP9BA, Southampton Parish, Bermuda.
28,245	kHz	A9XC, Hamala, Bahrain.
28,247.5	kHz	EA2OIZ (Unofficial beacon).
28,247.5	kHz	EA20IZ (Unofficial beacon).
28,257.5	kHz	DK0TE, Konstanz, FR Germany.

In Group 2 (under construction) are the following:

28,212.5	kHz	ZD9GI, Gough Is.
28,222.5	kHz	HG5, Hungary.
28,237.5	kHz	LA5TEN, Oslo, Norway.
28,242.5	kHz	ZS1CTB, Cape Town.

DX NEWS, RUMOURS, FACT AND FICTION

Those of you who are chasing 5BWAZ may be interested in a letter received from K2EEK, editor of CQ Magazine. Initially one was able to claim a certificate for having worked the first one hundred of the required two hundred zones (40 zones on each band from 80 to 10m). Anyone who managed to get to the two hundred would be awarded a plaque. K2EEK states that the hundred zone certificate award has now been abandoned and that the first ten amateurs to work two hundred zones will receive a plaque, after that a certificate will be issued. It seems that the response to the award was so great that CQ was snowed under and the administration problems got out of hand. Just in case you think that forty zones on each of the HF bands is practically an impossibility, the first 5BWAZ has already been awarded to ON4UN. The award took John six months to work and accumulate the QSLs!! (Makes my efforts look a bit thin!!)

If you need Aves Island TV0 and you hear YV5HAM or YV5HQE, do not pass them by. These two stations are permanent residents on the island and have been heard in QSO on 20 SSB. There is one catch, their English is somewhat limited.

The 160 metre DX enthusiast may be interested to know that the Russian stations are now allowed to operate in the segment 1850-1950 kHz with a maximum of 10 watts input. The frequency range 1850-1875 kHz is reserved for CW only.

UK1PAA, in Franz Joseph Land, continues to be active and it is hoped that he will be equipped with SSB by the time this column is in print. He is reported to be very active on 14140 at 0500 and 1500 GMT, with UB5UAT as M/C, working at present CW to SSB.

The rumoured CE0X DXpedition looks a distinct possibility now. Call sign is reported to be CE0XEA and the operation is scheduled for October or possibly even earlier.

Those that needed Sable Island I hope managed to QSO VE4CF/L, QSLs go via VE4CF's home address (see QTHs).

Did you QSO JA6HOZ/BY? Well if you did I hope you worked the genuine article! The genuine JA6HOZ/BY was reported on 14210 working JA stations and then QSYd to 14020, when the QRM got rough. A JA6HOZ/BY was also reported on 21 and 28 MHz. If you did get a QSO I hope it was with the real one and that the call sign was authorised.

Marion Island ZS2MI still being reported as very active. Usually favours a frequency around 14250 kHz. QSL via WA2IZN.

Lots of activity from the SV area lately. Mount Athos was very QRV during August under the call signs SV1DC/A, SV1IW/A and SV1JG/A, together with activity by N2KA/SV9, N2KA/SV5 and W2TDQ/SV9, W2TDQ/SV5. QSL information in QTH section.

Another independent state in South Africa will be activated by VE3FXT and company from September 13th onwards. The call sign is unknown but the location is VENDA, which is about 200 miles north of Pretoria. This one will join S2 and H5 on the non-country list!

The Republic of Kiribati has been allocated the sequence T3A-T3Z by the ITU. Kiribati takes in most of the old VR1 and VR3.

VK4KX, in an interesting letter, passes along information that VU2CK may be going to the Andamans. Worth looking out for.

Well, that's the lot for this month. Check 025 and 14195 for those DXpeditions and keep an eye on the LF bands. Thanks to VK4KX, VK6AJ, VK6LK and G. Watts News Sheet. 73 es DX Mike VK6HD. My deadline for December is October 26th.

QTHs YOU MAY HAVE MISSED

JA2KWJ/A2C — Via JA3KWJ.
C3IOH — Via F6DNW.
FR7BE — Via W4LZZ.
FR7BU — Box 32, St. Paul.
FR7BW — Via REF.
JE3YAJ/JD1 — Via JE3SEN.
KH6LW/KH7 — Via KH6JEB.
K7GA/KH7 — Via W7 Buro.
M1Y — Via I0MWI.
OH2OT/OH0 — Via OH2BEJ.
SV1DC/A, etc. — Box 161, Athens.
N2KA/SV — Via N2KA.
W2TDQ/SV — Via W2TDQ.
TA3AC — Via W4KK.
TL8JM — Via W5RU, Box 73, Metaire, LA 70004.
VE4CF/1 — Noel Funge, 30 Mackie Bay, Winnipeg, Manitoba, R2Y 5V7.
ZD7HH — Via W4FRU (correction).
ZK1CQ — Via ZL1AMD.
ZK2DD — Via ZL1!ALE.
5N0DOG — Via W4FRU.
K9EF/8RI — Woody Minar, American Embassy, 31 Main Street, Georgetown.

RAILWAY MOBILE DXPEDITION MARREE-ALICE SPRINGS-MARREE

Following more discussions with the Australian National Railways by telephone, both with their Adelaide headquarters and operations staff at Port Augusta, the proposed trip from 6th to 10th August has had to be postponed until a date to be advised. This appears largely to be due to problems in arranging for the special brake-van because of the industrial dispute which had closed down the operations of their entire system over a lengthy period until recently, and the backlog of traffic that they must now have to cope with.

Further information will be passed on as soon as it is available; October or November has been suggested by the ANR Public Relations Officer.

A letter has eventually arrived from the ANR and extracts are quoted:

"The recent spate of industrial action on the ANR network prevented any detailed input by the ANR public relations section into the exercise. You will no doubt appreciate that the cost of such an exercise could only be justified on the publicity it generates for Australian National Railways. It is likely that a number of publicity exercises involving the last few trips of the Ghan will be arranged by ANR towards the end of **1980.** It is suggested that your ideas be re-submitted next year for **possible inclusion** in these publicity exercises."

In view of their reversal of attitude and the very bad press this now becomes both for the expedition and them, I feel that they might be able to organise their side of the publicity adequately for the event to take place by the end of **THIS** year (which by their earlier admission is the best time due to a seasonal fall-off in traffic) if they are pushed by external pressure into such a commitment. I and others I have spoken to feel that it would be pointless to resurrect the trip in, say, 16 months.

Discussion with the local amateur radio club has produced a decision to ask all interested people to write direct to the ANRC expressing concern; as a government body they may well respond to sheer volume of correspondence. Attached hereto is a sample letter readers may care to employ. The fact that they may receive identical letters from all over the world might impress upon them the effectiveness of our communication, and the world-wide publicity the trip has received.

In the meantime copy for the Award Certificate and QSL card has been almost finalised and as far as this station is concerned, all systems are "go" subject to taking leave at the appropriate time.

73 de Dick Ashton VK5DQ, PO Box 11, Woomera, South Australia 5720.

SAMPLE LETTER

"Public Relations Officer, Aust. Nat. Rlys. Commission, 55 King William Road, North Adelaide, South Australia 5006.

I am/We are disappointed to hear of the cancellation of the AR mobile expedition on board the "Ghan" express 50th anniversary trip, and can appreciate the circumstances which led to this decision being made.

It was understood that November or December, 1979, was the original proposed date and I/we hope that this date can still be met in view of the interest generated world-wide as a result of publicity through the many AR societies who have supported the expedition by including the item in their regular weekly news broadcasts and by print in their monthly newsletters and magazines all over the world.

I/We feel that the goodwill and excellent press would be wasted if the journey is deferred beyond the end of 1979 as the ANRC has already received tremendous publicity." ■

REMEMBRANCE DAY OPENING ADDRESS

Recorded script: Official opening Remembrance Day Contest 1979.

Richard E. Butler, Deputy Secretary-General International Telecommunications Union (ITU).

INTRODUCTION

This is Ted Robinson F8RU, past President of the International Amateur Radio Club 4U11TU at the headquarters of the International Telecommunication Union in Geneva, Switzerland.

It is a great pleasure and honour for me to introduce Mr. Dick Butler, the energetic Australian Deputy Secretary-General of the ITU and patron of our Club, who has always shown a keen interest in all matters related to the Amateur Service.

RICHARD E. BUTLER

In the year 1979, I am delighted that I, as Deputy Secretary-General of the ITU, have been invited to open your Remembrance Day Contest and to remember, with you, those who have served before us, offering their skills and services without hesitation and indeed their lives in time of national need. In thanking my colleague, Ted Robinson, for the introduction, I should add that he comes from Belgium, a country well known to many Australians who served abroad.

Amateur radio has had formal recognition in the ITU statutes for a little over 50 years of the Union's 114 years of existence. Initially, as part of what was known as the "private experimental station" but nevertheless operated by "a person interested in radio technique solely with a personal aid and without pecuniary interest". How wise that international encouragement and recognition proved to be, a small legislative concession, when radio was in its infancy. It encouraged personal initiative and interests, as well as self-help. The growth of amateur radio has proved to be of basic importance to community service, without cost, in times of stress and emergency. Think of the local fire fighting unit in the early days. The regulatory provisions established a major potential for fostering goodwill between people with the same pursuits in other countries — yet never to meet except through the friendly dialogues on the air.

The radio frequency possibilities and spectrum operation conditions for the amateur service, which was elevated from recognised station use to a "Service" at the ITU Atlantic City Conference in 1947, received even more formal recognition as a "Radiocommunication Service", being permitted to operate in space, following the World Administrative Radio Conference for Space Telecommunications in 1971. The practical possibilities for amateur enthusiasists was enlarged immensely as the world community moved to the adaptation and use of satellite telecommunication.

But let us not overlook the conventional radiocommunications which continue to satisfy our personal needs and contribute to our knowledge of technical propagation conditions.

In Geneva, September 1979, there will be another focal point for the amateur community. The reasons — the World Administrative Radio Conference 1979 — for which our colleagues — your colleages, and they are much more numerous now, are preparing all over the world.

I have been privileged to be associated with some of these preparations: in the Region 1 meeting in Hungary of the IARU, then in all of the ITU forms, the CCIR and the preparatory seminars, including that of the Asian/Pacific region generously hosted by the Australian authorities. In all of these activities, the amateur interests have been in the forefront of consideration. Such preparations lead one to be optimistic in the search for and negotiation of rational solutions which will respond adequately to the competing needs for radio frequency spectrum of all users, including the amateurs.

So, happy hunting and good luck. Do not be too worried by the WARC. You have admirable representatives in your delegation.

"Thank you for listening." It is an honour for me personally to declare open your 31st Remembrance Day Contest. ■

QSP

ELECTRONIC MAIL EQUIPMENT

By 1987, so states a news item in Telecommunication Journal for May 1979, annual sales of electronic mail terminal equipment will total $US2500 million. "Electronic mail" is the name given to person-to-person messages which are transmitted electronically but which may be paper-based at either end; the most familiar being telex. More sophisticated systems allow word processors to communicate with each other via a modern and existing voice network. Another well-established system is facsimile but the future for this is not viewed as optimistically as others. An important development is expected of "super-telex", Teletex, which is a combined text and graphic device expected eventually to supersede telex. ■

NEW ATLAS 110 LINE

• 250 WATTS • $499 • 80–10Mx •

At GFS, Australia's Atlas agents, we are proud to introduce a real breakthrough in HIGH POWER, LOW COST, amateur transceivers.

First came the receiver, The Atlas Rx-110 ... A performance plus Amateur Band Receiver incorporating high sensitivity, selectivity and dynamic range.
Couple that to a "bolt-on" Transmitter Module, the Atlas TX-110H ... which has low spurious and harmonic radiation, high carrier and unwanted sideband rejection and 250 Watts in-put. You now have the unbelievable Atlas RX/TX-110H top performance transceiver which costs ... NOT $950 ... NOT $750 ... NOT even $650 but just **$499**

ATLAS RADIO INC.

RX/TX-110 Transceiver $499
PS-110 Power Supply $109
MM-110 Mobile mount $58

Now for only a fraction of the outlay previously necessary you can run up to 250 Watts on 80 thru 10 Metres, work CW or SSB, operate from the Car, or home QTH using the RX/TX-110H and its AC Power Supply, PS-110.

* * * * * * *

For color brochure with complete specifications write to us, phone us or just drop in and have a look at the RX/TX-110.

* * * * MORE OUTSTANDING FEATURES * * * *

- **Frequency Coverage** 3.5-4.0 MHz, 7.0-7.5 MHz, 14.0-14.5 MHz, 21.0-21.5 MHz, 28.0-29.0 MHz.
- **All Solid State**, High Performance Design. Excellent sensitivity, selectivity and dynamic range superior to most receivers currently on the market.
- **Receives and transmitts CW and normal SSB.** LSB on 3.5 and 7.0 MHz bands, USB on 14.0, 21.0 and 28.0 MHz bands.
- **Semibreak-In CW** is a standard feature
- **Built in** speaker and CW sidetone.
- **Modular Design** provides much easier service and maintainance. This is a piece of equipment that you can work on yourself if you wish, because you can get at everything with ease.
- **Choice of** 12-14V DC for mobile or 220-240 V AC for home operation with the Atlas PS-110 Power Supply.
- **Superior Size** RX/TX-110 measures just 31W x 10H x 25D cms.

NOW IN STOCK ATLAS 210X AND 215X, $795 ea., PLUS OTHER ATLAS ACCESSORIES.

TET SWISS QUADS

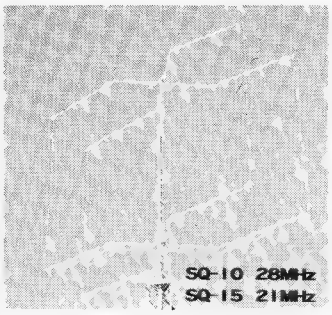

This antenna is a **PHASED QUAD** *and well known as a HB9CV QUAD. Its concept is to drive the Radiator and Reflector at the same time with* **phase differences** *to obtain more gain and better front-to-back ratio than the conventional quads.*

SQ-22 2m x 2 Stacked **16dB** Gain **$99**
SQ-24 2m x 4 x Stacked **18dB** Gain **$219**
SQ-61 6m x Standard **12dB** Gain **$119**
SQ-10 10m x Standard **12dB** Gain **$159**
SQ-15 15m x Standard **12dB** Gain **$169**
SQ-20M 20m x Loaded **10dB** Gain **POA**

STOP PRESS!!

G.F.S. Electronic Imports proudly announce that we are now Melbourne distributors of **ATN** *quality products,* **DSI** *Frequency Counters and* **Mirage** *Linear Amplifiers.*
ATN *Australian manufactured antennas range from 6 Element 28MHz Yagi's through to 432MHz 27 Element and 580MHz 14 Element Amateur TV Yagi's.*
For a complete price list and catalogue give us a call or drop us a line.

FINANCE AVAILABLE TO APPROVED PURCHASERS

Great Circle Map centred on Melbourne.

This new sought-after map, published by G.F.S. has just arrived. Centred on Melbourne it allows the user to take a bearing for directing an antenna to any place in the world. It also reads the shortest distance to that place. At 33.5cm x 43cm it is easily read and would be ideally suited to wall mounting or just mounting under a glass desk top.
Price: $1.00
allow 75 Cents for post and packing.

NEW PRODUCTS FROM MFJ

Now a very wide range of Antenna Tuners

MF-984 3KW Ant. coupler/Dual Meter type SWR/Power Meter/Co-Ax switch for Bal and Un Bal Line (Inc. Balun). **$419.00**
MFJ-982 3KW Ant. coupler/SWR/Power Meter for Bal and Un Bal Line (Inc. Balun). **$279.00**
MFJ-962 1.5KW Ant. coupler/SWR/Power Meter 6 Pos. Co-Ax SW for Bal and Un Bal Line (Inc. Balun). **$233.00**
MFJ-961 1.5KW Ant. coupler/6 Pos Co-Ax SW for Bal and Un Bal Line (Inc. Balun). **$199.00**
MFJ-949 300W Ant. coupler/SWR/Power Meter/200W Dummy Load/Co-Ax SW for Bal and Un Bal Line (Inc. Balun). **$179.00**
MFJ-941B 300W Ant. coupler/SWR/Power Meter Co-Ax SW for Bal and Un Bal Line (Inc. Balun). **$139.00**
MFJ-943 300W Ant. coupler for Bal and Un Bal Line (Inc. Balun). **$109.00**
MFJ-901 200W Ant. coupler for Bal and Un Bal Line (Inc. Balun). **$93.00**
MFJ-900 200W Ant. coupler for Unbal Line (No Balun). **$78.00**

Tunable Active SSB/CW Filters

MFJ-752 Dual TUNABLE ACTIVE SSB/SW FILTER inc. Peak/Notch, Noise Limiters, and two Variable Frequency Filters. **$139.00**
MFJ-751 Tunable Active SSB/CW Filter. **$109.00**

Electronic Keys

MFJ-481 THE GRANDMASTER MEMORY KEYER, stores 2 x 50 character messages 8-50 WPM. **$139.00**
MFJ-402 Econo Keyer, built-in Paddle, Weight and Speed control, 8-50 WPM, solid state keying. **$78.00**

Other Accessories

LSP-520BX II Super Logarithmic speech processor 30dB dynamic range and 3 Active Filters. **$93.00**
MFJ-202 Antenna Noise Bridge, wide range 0-250 Ohms, ± 150 pF Xcc, 1-100MHz. **$78.00**
MFJ-1030 BX 10-30MHz Preamp, 25dB gain. **$78.00**

Wide Range of Semiconductor Spares available as used in YAESU, KENWOOD, STANDARD, etc.

NEW!!!

STANDARD C6500

HF WADLEY LOOP COMM. RECEIVER

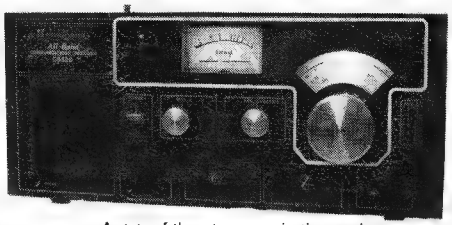

SR

$339

A state of the art communication receiver covering the range 0.5-30MHz using a Wadley Loop for rock solid stability. Unlike some other receivers that use only one filter in the IF and exhibit poor selectivity The C-6500 has two filters, giving good selectivity on SSB and AM. For more details write to us for a brochure.

SX-100 PROGRAMMABLE VHF/UHF 16 CHANNEL SCANNING RECEIVER

COVERING 6, 2 AND 0.7 METRE BANDS

It had to come. A Keyboard Entry, **Microprocessor** controlled VHF/UHF Monitor Receiver from Japan with the following outstanding features:

- Wider frequency range, 30-54, 140-180 and 410-514 MHz.
- 5 KHz Channel Spacing on VHF and UHF.
- Covers 6, 2 and 0.7 meter Amateur Bands.
- Over 32,000 Channels.
- 0.5 uV Sensitivity.
- 220-240 VAC and 12-16 VDC operation.
- Large Green readout, showing channel number, frequency, time, day and date.

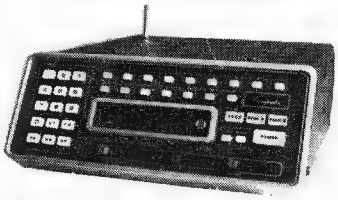

$392 Incl. S.T.

Write for a brochure or drop in for a demonstration of this remarkable receiver.

Because the **SX-100** covers such a wide frequency range, virtually any of the thousands of VHF/UHF **Commercial, Amateur** and **C.B. two-way services** in Australia can be monitored at the press of a button, e.g. **FIRE BRIGADE, POLICE, VHF MARINE OPERATIONS, CFA** and many, many more.

CALLBOOKS	
Foreign Callbook	$17.95
USA Callbook	$18.95
World Prefix Map	$3.00
Kit of Maps	$5.00

GFS TOWER 6metre Self Supporting mast **$75**

Also available many other accessories.
Allow 20C postage for all brochures.

G.F.S. ELECTRONIC IMPORTS 15 McKEON ROAD, MITCHAM, 3132 (03) 873 3939

CUSTOM COMMUNICATIONS

SHOP 11, PARRAMATTA ARCADE,
CNR. CHURCH & DARCY STREETS,
PARRAMATTA, N.S.W. 2150.

TEL: 635 6399
A/H: 607 9168

"NEW" 10-80 MTR. VERTICAL ANTENNA. ONLY $75

2 MTR. 7/8 WAVE MOBILE WHIP. including BASE LEAD $32

2 MTR. STACKED YAGI $138

5/8 WHIP included $28

ICOM Gear

IC701	HF solid-state 160 m 10 m transceiver — **$1380.00**
IC701PS	Matching power supply/speaker for above — **$253.00**
IC22S	2 m FM synthesized — **$299.00**
IC280	2 m FM remotable cpu controlled — **$450.00**
IC215	2 m FM portable inc. 1 channel — **$229.00**
IC402	70 cm ssb portable 3 watts — **$439.00**
IC502	6 m ssb portable, 3 watts — **$239.00**
IC202S	2m ssb portable, 3 watts — **$349.00**
IC211	2 m all-mode ac/dc transceiver — **$799.00**
ICRM3	Remote control unit — **$159.00**
ICSM2	Condenser-electret desk mic. — **$45.00**

Speech Compressors & Processors (Daiwa)

RF660	Phasing type, dc, 6db gain — **$109.00**
RF440	Phasing type, ac/dc, 6db gain — **$126.00**
RF550	Filter type, ac/dc, 6db gain — **$169.00**
MC330	Speech compressor — **$99.00**

Microphones

VM-1	Noise cancelling hand ptt, dynamic, low Z — **$10.00**

Antenna Couplers

CL67A	Daiwa 1 9 — 28 Mhz 500 W pep— **$135.00**
CNW217	Daiwa incl SWR/PWR meter, 200 W — **$165.00**
CNW417	Daiwa incl. SWR/PWR meter, 500 W — **$199.00**
MFJ901	MFJ. Matches everything 1.8 — 30 MHz — **$119.00**
MFJ16010	MFJ Random wire tuner 160-10 M — **$71.00**
MFJ941	160-10M, 300 W incl SWR/PWR — **$157.00**
LAC-895	Leader 3 5 thru 28 MHz — **$169.00**

Antenna Rotators (Daiwa)

DR7600S	Heavy Duty with controller & mast clamps — **$259.00**
DR7500S	Medium Duty with controller & mast clamps — **$189.00**
6 Core	Cable for above (200 m rolls) — **$1.00/m**

QRP Transmitter (MFJ)

MFJ40T	5w 40 meter CW (Xtals not included) — **$59.00**
MFJ40V	UFO unit for above — **$59.00**

Hand Held Transceiver

AR240	2 meter 800 ch. synthesized, 1.5 w. — **$365.00**

Daiwa Low Pass Filters

FD30LS	32 MHz, Fc, 200 w , 3 stages — **$20.00**

Baluns

AS-BL	Asahi 50 ohm for beams — **$34.00**
BL50A	50 ohm, 4 KW, 1:1 for dipoles — **$30.00**
BL70A	70 ohm, 4 KW. 1:1 for dipoles — **$30.00**

Leader Test Equipment

LAC-895	Antenna Coupler 3.5 — 28 MHz — **$169.00**
LPM-885	SWR/PWR Meter — **$89.00**
LPM-880	RF Power Meter — **$135.00**
LDM-815	TR Dip Meter — **$89.00**
LBO-310	3" Ham Oscilloscope — **$310.00**
LA-31	Ham monitorscope adaptor — **$25.00**

Just arrived!

The IC22s 2m FM transceiver

The most popular FM rig around. It's now available at a special price. Come in and check it out.

Now only $299

Radio Teletype Terminal

0-7000	Tonno RTTY CW/Baudot/ASCii — **$839**

Tubes

6KD6	Finals for Yaesu linears — **$9.00**
6JS6C	Finals for Yaesu transceiver — **$9.00**
12BY7A	Driver — **$3.75**
6146B	Finals — **$12.00**

CW Finals

FT101E	Yaesu — **$39.00**
TS520S	YG3395 Kenwood — **$57.00**
TS820S	YG88C Kenwood — **$59.00**

Kenwood Morse Keys

HK702	Deluxe Key with marble base — **$41.00**
HK708	Economy Key — **$23.00**
HK706	Operator's Key — **$25.00**
MK701	Manipulator (side-swiper) — **$45.00**
PALOMAR	1 C Keyer — **$149.00**

SWR/PWR Meters & Dummy Loads

VC-2	Twin meters 3-150 MHz with cal. chart — **$35.00**
SWR200	Oskerblock 3-200 MHz, 2/20/200/2000W— **$86.00**
SW210A	Daiwa 1 8 thru 150 MHz, 20/120 W. direct — **$99.00**
SW410A	Daiwa 140-500 MHz, direct reading — **$129.00**
CN620	Daiwa Cross-needle, 18-150 MHz, direct — **$99.00**
CN630	Daiwa 140-450 MHz, 20/200 W, direct reading — **$135.00**
CN650	Daiwa 1 2 — 2 5 GHz, 2/20 W, direct reading — **$169.00**
LPM-885	Leader SWR/PWR meter — **$89.00**
LPM-880	RF Power Meter — **$135.00**
RW-155D	Kuranishi RF Power Meter — **$185.00**
RW-151D	Kuranishi RF Power Meter — **$165.00**
RW-1002L	Kuranishi RF watt meter — **$139.00**

Kenwood Transceivers

TS-520S	P.O.A.
TS-820S	P.O.A.
TS-120V	P.O.A.
TL-992	P.O.A.
TS-120S	P.O.A.

TRY US ON OUR PRICES FOR ALL KENWOOD PRODUCTS!

Coaxial Switches

CS201	2 Position, high pwr, to 500 MHz — **$23.00**
CS401	4 position, high pwr, to 500 MHz — **$59.00**

Coaxial Change-Over Relays (Daiwa)

CX-2L	1.8 thru 170 MHz, 100 W pep max — **$45.00**
CX-2H	1 8 thru 450 MHz, 200 W pep max — **$69.00**

Jaybeam Antennas

5Y/2m	5el 2 m, 7.8 dBd gain, length 1.6 m — **$43.00**
8Y/2m	8el 2 m, 9.5 dBd gain, length 2.8 m — **$51.00**
10Y2m	10el 2 m, 11.4 dBd gain, length 4.4 m — **$84.00**
10XY/2m	10el 2 m, cross yagi, 11.3 dBd — **$114.00**
D8/70cm	Twin 8el, 70 cm, 12.3 dBd, 1.1m — **$64.00**
PBM 18/70	18el, 70 cm, 14 9 dBd, 2 8 m — **$96.00**
MBM 48/70	48el, 70 cm, 15.7 dBd, 1.83 m — **$83.00**
MBM 88/70	88el, 70 cm, 18 5 dBd, 3.98 m — **$105.00**
PMH/2C	Phasing Harness — **$20.00**
8XY/2M	2 m cross yagi, 8el, 9.5 dBd, 2.8 m — **$99.00**
12XY/70 cm	70 cm cross yagi, 12el, 13.0 dBd, 2.6 m — **$139.00**

Parabolic Dishes

PBA-1200	70 cm and 1.2 Ghz complete — **$349.00**

Rak Antennas

AL24DXN	20-40 m trap dipole — **$70.00**
A4VPN	40 m dipole kit — **$27.00**
LISTENER 3	Short wave Rx antenna — **$49.00**
LISTENER 1	Short wave Rx antenna — **$22.00**

Nagara

SS56	6 m 5 el beam 1 KW — **$159.00**
V5JR	80-10 m trap vertical, 6 7 m high — **$129.00**
V4JR	40-10 m trap vertical, 5.2 m high — **$99.00**

Hy-Gain Antennas

HYQUAD	10/15/20 m. 2 element quad — **$279.00**
204BA	4 el monobander for 20 m — **$259.00**
TH6DXX	6 el tribander — **$310.00**
TH3MK3	10/15/20 m 3 el beam — **$249.00**
TH3JR	10/15/20 m 3 el beam — **$229.00**
203BA	3 el beam 20 m — **$199.00**
LONG JOHN	5 el wide-spaced 27/28 MHz — **$180.00**

CUSTOM COMMUNICATIONS

NOW IN BRISBANE

95 BRUNSWICK STREET
FORTITUDE VALLEY (07) 52 7326

SWAN TRANSCEIVERS

350B ANALOG READOUT 300W DC INPUT	**$580.00**
350 D DIGITAL READOUT 300W DC INPUT	**$630.00**
HF-700S 500W DC INPUT INCLUDES P.S.	**$795.00**
100 MX 100 W SOLID STATE MOBILE	**$630.00**
16 POLE X-TAL FILTER FOR MOD. 500, 700,	**$65.00**

SHURE DESK **$54**
SHURE H.H. **$36**
MOBILE MATCHBOX **$35**
ANT. TUNER 4 Kw 4:1 **$195**
ANT. TUN WITH METERS **$245.00**
ETC.

INTERSTATE & COUNTRY DEALERS

DX ENGINEERING
PORT MACQUARIE
MACELEC
WOLLONGONG
ROD PIKE TRADING
COONAMBLE
DIETCHTRONICS
NEWCASTLE
ARMIDALE ELECTRONICS
ARMIDALE
WILF MURRELL
HILLSTON
HARVEY SCEGG
TASMANIA
STOCKMAN & HIGGINS
INVERELL

CUSTOM COMMUNICATIONS

NOW IN BRISBANE

95 BRUNSWICK STREET
FORTITUDE VALLEY 4006

TELEPHONE:
(07) 52 7326

ASK FOR OUR "SPECIAL" OF THE MONTH

ICOM PRODUCTS

IC-701	$1380.00
IC-701PS	$253.00
IC-211 2 Mtr. All mode.	$799.00
IC-280 2 Mtr. Mobile, CPU	$450.00
IC-22S 2 Mtr. Synthesized.	$330.00
RM-3 Rem. Cont. for 701	$169.00
IC-202E 2 Mtr. Handheld	$239.00
IC-502 6 Mtr. Handheld	$239.00
IC-402 70 cm Handheld	$469.00
IC-215 2 Mtr. FM Portable	$245.00

SWAN TRANSCEIVERS

350B Analog 300 watts input	$580.00
350D Digital 300 watts input	$630.00
HF-700S 500 watt DC input	$795.00
100 Mx 100 watt Mobile	$630.00

KENWOOD PRODUCTS

TS-520S	$650.00
TS-820S	$1050.00
TS-120V	$520.00
TS-120S	$695.00
TS-700SP	$895.00
TS-600	$850.00
TL-922 LINEAR	$1100.00
VFO-820	$175.00
SP-820	$65.00
TR-7625	$450.00
PS-20	$110.00
PS-30	$195.00
MC-50	$50.00
AT-200	$175.00
AT-120	$115.00

KYOKUTO DENSHI

2 Mtr. 1000 Channel. Memory. Scan	$380.00

HOKUSHIN MULDOL ANTENNA

HF-5 10-80 Mtr. Vertical	$75.00
Oscar 2D 7/8 wave, 2 mtr. mobile. incl. Mount and Coax	$32.00
Oscar 2S 5/8 wave. 2 mtr. mobile. including Mount & Coax	$29.00
144HS-16 8 Element stacked Yagi for 2 mtr.	$138.00
144HS-8 8 Element Yagi	$70.00
Rubber Duck 2 Mtr. to fit on mobile mounts	$4.00

COUNTRY & INTERSTATE DEALERS

DX ENGINEERING, PORT MACQUARIE
MACELEC, WOLLONGONG
ROD PIKE TRADING, COONAMBLE
DIETCHTRONICS, NEWCASTLE
ARMIDALE ELECTRONICS
WILF MURRELL, HILLSTON
HARVEY SCEGG, TASMANIA
STOCKMAN & HIGGINS, INVERELL

LEADER — TEST INSTRUMENTS
McKAY — DYMECK RECEIVERS
ROTATORS, HF-MOBILE SCALAR ANTENNAS, ANT. COUPLERS
HF-YAGIS AND LOTS OF OTHER EQUIPMENT.

Queensland Dealer Enquiries Welcome

● HAM RADIO SPECIALISTS ● HF-VHF EQUIPMENT ● RTTY UNITS ● S.S.T.V. ● NOVICE EQUIPMENT ● ROTATORS ● JOSTY KITS, ACCESSORIES ● WORKSHOP REPAIRS ● TEST EQUIPMENT ● LEADER INSTRUMENTS

WE TRADE IN

Sideband Electronics Sales

KDK KYOKUTO DENSHI CO.,LTD.

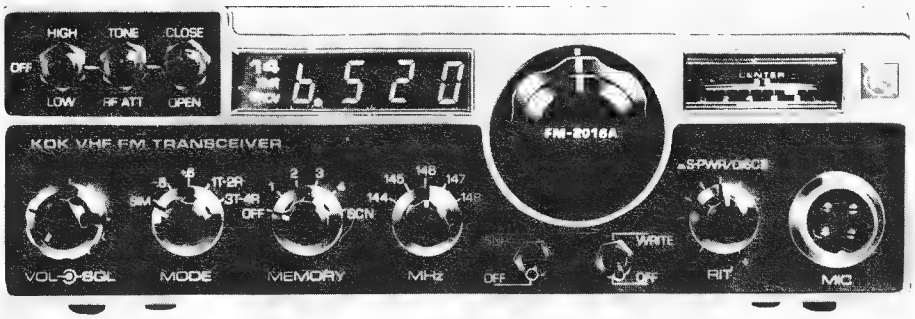

NEW KYOKUTO 15W. Output $360 Available Now

SPECIFICATIONS-FM-2016A/FM-2016E

GENERAL

FREQUENCY COVERAGE:	*144.000 - 148.995MHz, 10KHz steps & +5KHz, 1000 channels.*
	144.000 - 148.995MHz, Ditto above receive only, FM-2016E
	144.000 - 145.995MHz, Transmit, FM-2016E
SEMI-CONDUCTORS	*11 FET, 33 Transistors, 17 IC's and 65 Diodes*
MEMORY CHANNELS:	*4 Channels*
SCANNING:	*Scanning of 4 memory channels for open and closed channels.*
FREQUENCY STABILITY:	*Better than +.002%*
USEABLE TEMPERATURE RANGE:	*-20°C to +60°C*
POWER SOURCE:	*DC 13.8v, ±10% (negative ground)*
ANTENNA IMPEDANCE:	*50 ohms nominal, unbalanced*
CURRENT CONSUMPTION:	*Less than .4A receive standby, .6A maxium volume*
	Less than A 15watts, 1.3A 1 watt
DIMENSIONS:	*180w x 60h x 195d mm*
WEIGHT:	*2.5Kgs, transceiver only*

From: SIDEBAND ELECTRONICS
SALES PH: 438 4191
AMATEUR ELECTRONIC IMPORTS
PH: 547 1467

FM — 6016 50 - 54 MHz FM 800 CH. 25W. $330

NEW! SKY·BAND MOBILE ANTENNAS

THIS NEWLY DESIGNED UNIQUE MOBILE ANTENNA HELICALLY WOUND EXTRA HEAVY DUTY. SIX FEET LONG, AND CAN HANDLE UP TO 400 WATTS P.E.P.

FEATURES:
Light weight.
S.W.R. better than 1: 1.05 at resonance
Covered with highest grade fireproof insulation
Chrome base with 3/8 24 tpi. thread
Available in colours, grey, white, blue, green burnt orange, brown and black.

AVAILABLE:
SKY. 80M 3.5 Special Novice 3.65
SKY. 40M 7.06
SKY. 20 14.150
SKY. 15 21.100 and up.
SKY. 10 28.5 and up.
SKY 10/15 special

PRICE LIST:

SKY 80 6 feet long 3.5 MHz	$28
SKY 40 6 feet long 7.060	$26
SKY 20 6 feet long 14.150	$26
SKY 15 6 feet long 21.100	$25
SKY 10 6 feet long 28.500	$24
SKY 10/15	$30

All Sky-Band Antennas are carefully designed and have been individually tested. High quality fibreglass rod, wound with optimum thickness of wire to keep weight down, but maintain High Q. An elegant design to those who only want the best. All antennas are factory tuned for the lowest portion of the desired band and can simply be trimmed for your chosen frequency. Yes it is allAustralian made! You don't pay for large overheads, instead we use the best material available and offer a mobile antenna which will resonate to our frequencies, unlike the previous overseas designed antennas.

ORDER NOW AND SPECIFY THE COLOUR YOU REQUIRE

SIDEBAND ELECTRONICS SALES, 477 - 479 PACIFIC HIGHWAY, CROWS NEST. PHONE 438 4191

WICEN

Ron Henderson VK1RH
Federal WICEN Co-Ordinator,
53 Hannaford St., Page ACT 2614
Ph. (062) 54 2059, A.H.

PROWORDS

You have no doubt heard WICEN networks in action and been puzzled or even amused by some of the expressions used. These standard and repeated words or phrases are PRO WORDS (short repeated words or phrases are PROWORDS (short for **pro**nounceable **words)** which have a fixed meaning for WICEN operators. They speed up message handling and reduce confusion due to their assigned meanings, not unlike the "Q" code in CW.

In this issue I intend to list the most common ones together with their agreed meanings. In later columns I will give examples of radio nets showing prowords in use.

LIST OF PROWORDS
EXPLANATION

Proword	Used by Sender	Used by Receiver
CONTROL OF AIR TIME		
OVER	That ends my transmission. I am listening to hear your reply.	I have replied but expect further transmission from you.
ROGER		Message received and understood.
OUT	My transmission is ended. No reply is required.	My transmission is ended. No reply is required.
REPORTING CIRCUIT CONDITIONS		
HOW DO YOU HEAR ME	What is the strength of my signal?	
LOUD AND CLEAR		Your signal is loud and clear.
READABLE		While not loud and clear, your signal is readable.
WEAK		Your signal is weak.
INTERFERENCE		You are hard to understand because of interference to your signal.
DISTORTED		You are hard to understand because of distortion to your signal.
MESSAGE HANDLING		
MESSAGE	I have a message for you.	(The receiver should have a Message Form ready to write the message.)
LONG MESSAGE	I have a long message, use a large form.	
RELAY	Transmit this message to all addresses or to the address designations immediately following.	
INFO	The message is to be passed for information to the designations immediately following.	
SPEAK SLOWER		Your transmission is too fast to write.
SAY AGAIN		Repeat all your last transmission or the part I will now identify.
I SAY AGAIN	I am repeating my transmission or the portion identified.	
ALL AFTER ALL BEFORE WORD AFTER WORD BEFORE	I SAY AGAIN the portion of the message you require and repeat your identification.	This identifies the part of the message I require. The reference I quote is the nearest word or phrase received correctly.
I SPELL	I will spell the next word phonetically.	
FIGURES	Numerals follow.	
WORDS TWICE	To indicate that each phrase or group will be said twice.	To request that each phrase or group be said twice because conditions are difficult.
CORRECTION	I will correct a word or group I have said incorrectly.	
CORRECT	Your version is correct.	

Visiting Hong Kong

LET US ASSIST

WRITE FOR INFORMATION

ALL BRANDS

HF

VHF

UHF

RECEIVERS

ACCESSORIES

Tel. K 36 0606 K 38 3774

DELTA COMMUNICATION SERVICES LTD.

15 CUMBERLAND ROAD, KOWLOON-TONG, KOWLOON HONG KONG

Proword	Used by Sender	Used by Receiver
WRONG	Your last transmission was incorrect. The correct version is . . .	
READ BACK	Repeat this entire transmission back to me exactly as received.	
I READ BACK		The following is my response to your instruction to READ BACK.
VERIFY	Verify the whole (or the portion indicated) of the message with the originator and send the correct version Only the addressee will originate the request for verification.	
I VERIFY		That which follows has been verified by the sender in response to your request and is repeated.
GENERAL ITEMS		
WAIT	I am busy but will call within 10 secs.	I am busy but will call within 10 secs.
WAIT OUT	I am busy and will call you later.	I am busy and will call you later.
FETCH NAME	Fetch the designated named official to the radio.	
LOCSTAT	What is your present location?	My present location is . . .
WILCO	I have received your message, understood it and will comply with it.	

5. Paul VK9NW, in spite of the fact that he has been allocated a two letter call by the powers-that-be, is a novice. He can only operate the normal novice bands and that does not include 52 MHz. (When Paul first applied for a call sign, he was given VK2VGV. He wrote back and said he would prefer a VK9N call. They then allocated VK9NW. This tended to indicate they neither knew nor cared what was going on, so Paul left it at that. If this causes too much confusion blame the licensing authorities, not him.)

6. Needless to add, even with my help and an 'old antenna', there is no way that Paul can get on to 6 metres legally, except to pass the full call examination. He is at present studying for the next one, and is not very active on the air for mainly that reason.

I have already had two letters from operators who have read the article with queries about 6 metres operation on Norfolk. It would save them time and effort and expense writing, and the same for me answering, if you could find the space to publish a little more accurate information, i.e. forget Norfolk Island or else buy a plane ticket and bring your own rig over if you wish a QSL card that badly.

Operating from a location such as this can be a bind at times, and the spreading of totally misleading stories does not make it easier for any of us over here. I am not a DXer, or a fanatic, and Ham radio is not my number one hobby by any means — and take it from me that applies to all the other permanent call operators here as well. I will continue to do my best for what it is worth, but NO promises.

Thank you,

Yours faithfully,
Charles Shaw VK9NI." ■

LETTERS TO THE EDITOR

Any opinion expressed under this heading is the individual opinion of the writer and does not necessarily coincide with that of the publisher.

74 Warmington Road,
West Sunshine 3020
7th August, 1979

The Editor,
Dear Sir,

If an individual amateur radio operator breaks his licence regulations he is penalised by the authorities; and quite rightly so! But it seems that if enough people break the law, then the law is changed!

The law was broken by Pirate CBers! For the offence they were given a **complete** Amateur Service Band!

As far as we can see, nothing has been given to the Amateur Service to replace this band.

Radio operators in the Amateur Service have committed no offence but they have been punished severely by the removal of a **complete** band!

The Amateur Service has been given no replacement HF band nor any additions to existing HF bands. Also I quote from ARA, Vol. 2, No. 3, Eris: "What happened to third party traffic privileges offered by the P. and T. in compensation?".

Is the WIA like the Government and Medibank, keeping their heads in the "sand" hoping that if we get extra band(s) from WARC, all the operators in the Amateur Service will forget the terrible 27 MHz **crime.**

EDITOR'S NOTES:

1. Novice licensees were granted a segment of the 10 metre band, as requested by the WIA.
2. Referring to paragraph 1 of this letter, who will remove the law breakers?
3. Look at the Editorial in AR of September 1977. ■

7 August 1979

The Editor,
Dear Sir,

I think the enclosed copy of a letter to the editor of ARA speaks for itself.

My reason for sending you a copy is that you may find it beneficial to WIA members who read AR to know the true situation and how they stand.

Just a couple of lines somewhere in your magazine may save a lot of people a lot of trouble.

Thanks.

Charles Shaw VK9NI.
PO Box 290, Norfolk Island, NSW 2899

7 August 1979

"To the Editor: Amateur Radio Action.

Copy: Editor: Amateur Radio (WIA).

Dear Sir,
Yesterday I was shown an article that appears on page 81 of Vol. 2, No. 2, of your magazine, under the heading 'Norfolk Island'

The information contained in this article is obviously intended as some kind of 'stir', perhaps at me personally, but I assure you that it is going to do the most damage to those Amateurs who are gullible enough to believe it and act upon it.

Perhaps you would like to publish the following correction information? However if you do, it is going to make the writer of the original article look a bit stupid, as there was hardly a word of truth in the original.

1. VK9NI will be inactive on 6 metres until further notice. No promises of any kind have ever been made to anyone.

2. I do not have a new antenna atop a 90 foot tower. My old antenna was atop a 21 foot length of water pipe. It fell down in strong winds and is a write-off.

3. I have never heard of a Lunar PA, let alone planned to get one.

4. All the operating I have done on the 6 metre band was done with borrowed equipment, which has since been returned to the owner, and I do not intend to borrow it again or buy anything or build anything for VHF operating.

The Editor,
Dear Sir,

I wish to inform you of the formation of a new radio club.

The Club is —

Shepparton and District Amateur Radio Club meets first Wednesday of each month at 7.30 p.m. sharp, Mechanics Institute Hall, 225 Wyndham Street, Shepparton. Informal meetings on third Wednesday.

If anyone would like further information, contact the Secretary, SDARC, PO Box 692, Shepparton 3630.

Yours faithfully,
Graeme Stevens VK3ZSQ,
Publicity Officer SDARC.
PO Box 692, Shepparton, Victoria 3630. ■

Join a new Member — NOW —

MAGAZINE INDEX

Syd Clark, VK3ASC

BREAK-IN June 1979
A Simple Aerial Coupling Unit; Oven Controller — Timebase Oscillator Power Supply; Twin for Galbraith PS1 (8 Amp, 13.5 Volt PSU); Spurious Free 2 Metre Transmitter; Bending Brake; Microprocessors.

HAM RADIO June 1979
RF Power Amplifier Design; AFC Circuit for VFOs; Satellite Tracking Systems; Diode Noise Source;

160 Metre Magnetometer; Digiscope — TTL Test Instrument; Talking Digital Readout; Packet Radio — Computer Linking; Biquad Bandpass Filter; Gallon-size Dummy Load; Digital Techniques; Multivibrators and Analog Interfacing.

CQ July 1979
Getting the Most Out of Schematic Diagrams, Part 2; RF Output Power Measurements, An Open Letter to All Radio Amateurs; Electronic Research Corp of Virginia SL-65; Famliy of VSWR/Net Power Indicators; Smoke Detectors, Quads, Verticals and Other Good Things; The CQ Awards Programmes; Learning the Morse Code, Part 2; The Heath and Radio Shack Novice Licence Study Materials; The Keyer is the Key; Solar Energy for the Future; QRP-420XC Transceiver Corrections.

QST June 1979
A Medium-Power Solid-State Transmitter; Build Your Own 5/8-Wave Antenna for 146 MHz; An LED Readout for the HW-2036; An Accurate, Low-Cost Antenna Evaluation System; Installation Techniques for Medium and Large Yagis; An Audio Transducer for the Deaf; Measuring Transmission-Line Velocity Factor; The Practical Side of Toroids; The Wee-Keyer; Aeronautical Mobile — The Only Way to Fly; Dr. Strangetone; High-Speed CW, Anyone; Results, 1978 Simulated Emergency Test; Results, Sixth Annual ARRL 10 Metre Contest; Novice Roundup Revisited; Diversity; Viva la Difference . . . Baton Rouge; Amateur Radio and the Kingdom of Tonga; Action on Capitol Hill.

RADIO COMMUNICATION July 1979
A Solid-State 1.8 and 3.5 MHz Exciter; Sinclair PFM200 Frequency Meter; Some Experiments with Audio Filters; A Simple Multi-purpose Memory; Some Refinements for the G3PLX VDU; FM Channel Locator for T158/59 Calculators; A VHF Visit to VK Land.

RADIO COMMUNICATION August 1979
Amtor, An Improved Radioteleprinter System, Using a Microprocessor; Roadrunner Wiring System and Holdings FT101 Improvement Kit; A CMOS Keyer with Memory; Ambit 96640 VHF NBFM Monitor Receiver; The "Tele-Scope"; The XJK; RAE Courses 1978-80; Visual Sunspot Records; HF Propagation Study; Will the RST System Last Until Judgement Day?

SHORT WAVE April 1979
The Datong ASP Automatic Speech Processor; Home-Built SSB Transmitters: Practical or Not; Beam Antennas, Rotators, Masts and Guys; Power FETs and RF.

RADIO ZS March 1979
Transmissions from Space.

RADIO ZS April 1979
The Devil's Sea; User's Report on the Kenwood TS-120V All Band Solid-State SSB/CW Transceiver; Baluns.

73 June 1979
Add Digital Display for $50; High-Performance Receiver Add-Ons; A Solution to the Home-Brew Housing Shortage; How Do You Use ICs; Customize Your HT1448; Ultra-Simple CMOS Logic Probe; The Voice of Wolf Creek; CB to 10; At Last, A Really Simple Speech Processor; New Life for Tube-Type Dippers; You Ought to be in Pictures; How to Toot Your Own Horn; A Junk-Box HT Charger; Protect Your Home-Brew Panels; Now You Can Possess Instant Recall; Calicu-Trip; Charging Up the WE-800; Where Have All the kHz Gone; The Ramsay 2m Amp Kit; An Improved Display for the TR-7400A; Inexpensive Scope Tuner; The Resistance Substitution Box; Vodka Amongst the Penguins; Protect Yourself with a GFI; Poor Man's CW Memory; Power for Mobile Operation; Project Update.

Syd. VK3ASC.

As I sit here writing the "Magazine Index" for what is very likely to be the last time (I retired on August 31st), my mind goes back over the years since joining the "Magazine Committee" as it was then known.

Over approximately twenty years of assisting with the work of producing "AR" a number of Editors have come and gone. First there was that stalwart of Amateur Radio, Ron Higginbotham, then Ken Pincott, Kelvin Cocking, Bill Roper and our present editor, Bruce Bathols. There may even have been one or two others I have failed to acknowledge, if so, my apology. Venues have varied from the private homes of members through Victoria Street to the present headquarters in Toorak. Techniques have probably changed most of all, for over this twenty years the solid-state revolution has occurred and the sixt foot racks have shrunk to desk top transceivers of a complexity we would never have believed possible.

During this time operating opportunities have been limited to sporadic forays on to the HF bands (mostly 40) and two metres. I hope that my opportunities in the future will be much enhanced and that I will have the pleasure of sharing eyeball QSOs with some of these contacts as my XYL and I expand our horizons. To all those who have offered a friendly word or a handshake along the way I say a "BIG" THANK YOU.

Syd. VK3ASC.

(The passing of an era? Who would like to see these reviews continue?—Ed.) ■

AWARDS COLUMN

Bill Verrall VK5WV

7 Lilac Ave., Flinders Park, S.A. 5025

AUSTRALIAN COMMONWEALTH ELECTORATE AWARD
This award was instituted by CHC Chapter 66 and has been available for some years. Publication of the rules in this issue may encourage some portable/mobile operators to plan "DXpedition" to some of the rarer electorates during the coming summer months.

OBJECT OF THE AWARD
(a) To foster an interest by Australian and overseas radio amateurs in making contacts with amateurs in all Federal electorates.
(b) To encourage Australian amateurs to more fully occupy the allotted frequencies, particularly those required for short range communication.
(c) To encourage Australian amateurs to co-operate with overseas and local stations in obtaining contacts with electorates with few or no active amateurs by undertaking mobile or portable operation from some electorates.
(d) To provide a Premier Award in Australia comparable with the NZ Counties Award.

AWARD REQUIREMENTS
(a) An initial certificate will be issued for 25 confirmations which must include VK2-9, VK3-6, VK4-4, VK5-2 and one each for VK1, VK6, VK7 and VK8.
(b) Endorsements will be issued for 50, 75 and 100 confirmations. These additional confirmations may be random contacts from any State.
(c) A special certificate will be issued for confirmations from all 125 electorates.
(d) Separate certificates may be obtained for different bands and/or modes.
(e) The operator on an electorate DXpedition may claim that electorate for his own ACE credit.
(f) Only contacts made on or after 1-1-73 are eligible for the award.
(g) In general all CHC rules are applicable.

APPLICATION
(a) All applications for award/endorsement must be made on the prescribed check list and certified in the space provided by either one CHC member or two licensed amateurs.
(b) The check list remains a complete record of all electorates confirmed, endorsements obtained and will be returned after each application.
(c) Applications for award, endorsements, check lists, etc., should be made to the Awards Custodian, Mr. Allen Smith VK2AIR, 111 Corthcott Road, Seven Hills, NSW 2147, Australia.

FEES
(a) Basic Award (25 confirmations), $1.00 Aust. Subsequent endorsements, 12 cents each. Final Certificate (125 confirmations), 50 cents. Check lists, 20 cents each.
(b) An additional fee of 50 cents will be charged if award or final certificate are required air mail. Endorsements/check lists will be automatically returned air mail.
(c) In order to reduce costs, IRCs or mint stamps from the applicant's own country to the equivalent Australian value are acceptable.

FEDERAL ELECTORAL BOUNDARIES
(a) To provide a permanent and stable basis for the award, boundaries existing at 1-5-73 and as defined on official electoral maps will be adopted as a standard.
(b) Official maps priced at $1.50 each are available from Commonwealth Electoral Offices in each State and with the exception of Tasmania, each State has two maps.

A full list of the electorates is too detailed to include in this column. All enquiries should be directed to Allen Smith, who will forward the required check list and application form.

AUSTRALIAN AWARDS
I continually receive enquiries for details of "Australian Awards" but am unable to provide a satisfactory reply. All I can do is refer the enquirer to back issues of "AR" and the various commercial ham radio publications. (See the 1979 Call Book. —Ed.) There are now so many awards available from within Australia, it is beyond the scope of this column to publish details of all awards because insufficient publication space is available anyway.

I will endeavour to include details of all new awards as they become available. It is also worthwhile to repeat such details at intervals as is the case for the ACE Award.

In collaboration with Jack Swiney VK6NAG, we are looking at the feasibility of compiling a directory of all awards, including WIA Awards issued from within Australia. It is a very time-consuming and expensive task to research back issues of "AR" and other magazines and write to the various award sponsors for details and samples of their awards. Then it may be possible to produce a directory similar to the CHC directory or the "Canadian Amateur Radio Awards" Directory. Any such publication could be made available at a nominal fee to cover costs, etc. The very least we could do is prepare an index of Australian awards with a cross reference to the page No. and issue of "AR" which contains the details.

WIA AWARDS
I wish to draw to the attention of all future applicants for WIA awards the following points:—

(i) **Verification — Rule 4.3.**
This rule states that the QSL (or other written evidence) must contain the six bits of QSO information to qualify for award acceptance. I still receive some applications which are unacceptable because some essential information is missing. This frequently occurs when applicants are submitting lists certified by two other hams (see Rule 4.5). The most frequent omission is the location of the station worked.

(ii) **Applications — Rules 5.1 and 5.2.**
The WIA makes no distinction between members and non-members and will issue awards to any ham who submits the required QSLs for qualification. However, approximately half the applications or general enquiries requiring a reply, which are received from our full members, do not contain any SASE or donations for postage. Brian VK5CA handed this job over to me in a reasonably healthy financial state, but the financial reserve is gradually dwindling. Within a few months I may not be able to reply to enquiries which do not contain return postage.

Good hunting. ■

Join a NEW MEMBER NOW!

AR ADDRESS LABELS

Please check your call sign, name, initials, address, grade and other details on your address labels.

Advise any corrections NOW to your Division or direct to WIA, Box 150, Toorak, Vic. 3142.

- The coding on the label reads: Letter Numeral Two digits One digit Two digits Grade Division Unused Distribution Zone.
- The Call Book data derives from the same EDP file.

CONTESTS

Wally Watkins VK2DEW
Box 1065, Orange 2800

October:

6/7	VK/ZL/OCEANIA PHONE
13/14	VK/ZL/OCEANIA CW
13/14	RSGB 21/28 MHz PHONE
20/21	RSGB 7 MHz PHONE
20/21	JAMBOREE ON THE AIR
27/28	CQ WORLD WIDE DX PHONE

November:

3/4	RSGB 7 MHz CW
3/4	ARRL CW SWEEPSTAKES
17/18	ARRL PHONE SWEEPSTAKES
24/25	CQ WORLD WIDE DX CW

1979 CQ WORLD WIDE DX CONTEST

Phone October 27-28 and CW November 24-25. Starts 0000 GMT Saturday, ends 2400 GMT Sunday.

Objective: For amateurs around the world to contact other amateurs in as many zones and countries as possible.

Bands: All bands 1.8 through 28 MHz.

Type of Competition: Single operator, single or all band. Multi operator all band operation only, single or multi transmitter. QRP single operator, not over 5 watts output.

Number Exchange: Phone, RS report plus zone (5705). CW, RST report plus zone (57905).

Multiplier: 1. A multiplier of one for each different zone contacted on each band. 2. A multiplier of one for each different country contacted on each band.

Stations are permitted to contact their own country and zone for multiplier credit.

Points: 1. Contacts between stations on different continents are worth three points. 2. Contacts between stations on the same continent but different countries one point. 3. Contacts between stations in the same country are permitted for zone or country multiplier but have zero point value.

Scoring: All stations, the final score is the result of the total QSO points multiplied by the sum of your zone and country multiplier.

Awards: This year first place certificates will be awarded to Australia only, not for each call area due to poor number of entries in the past. Single operator stations must show a minimum of 12 hours of operation. Multi operator stations must operate for a minimum of 24 hours.

Full details in "CQ" magazine.

REMEMBRANCE DAY CONTEST 1979

There were two errors in the rules as set out in July Amateur Radio and Amateur Radio Action. I can assure everyone that the correct rules were sent to the editor but they were changed without my consent or knowledge. The example of the SWL log was changed from that submitted and caused confusion and some hard words during the contest as well as some strongly worded comments on logs submitted. Due to the late delivery of July "AR", mid-August in NSW, I will be taking a lenient view of logs where the minor changes are involved. ■

AROUND THE TRADE

NEW DC-10MHz OSCILLOSCOPE FROM BWD

The new **BWD 804** just released by **BWD Electronics Pty. Ltd**, is an economically priced Single Beam Oscilloscope.

A most useful feature of the BWD 804 is its isolated ground.

The vertical amplifier sensitivity range is from 10 mV/cm to 50V/cm and it has a constant DC-10 MHz 3dB bandwidth.

The time base ranges from 200nSec to greater than 0.1 Sec/cm in six calibrated steps and has a continuously variable vernier control.

Calibration is better than 5 per cent over a wide temperature range and an input supply voltage range of 200 to 265V or 100 to 132V as selected.

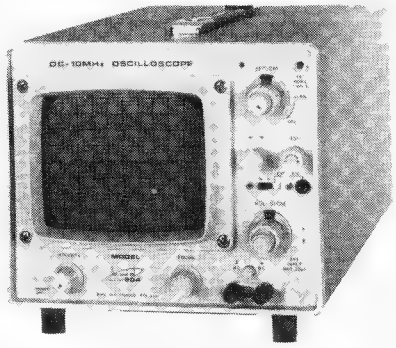

In addition to normal oscilloscope applications in audio, industrial, education and servicing fields, it is an excellent X-Y-Z monitor for analogue or digital displays.

Further details are available from BWD Electronics Pty. Ltd., Miles Street, Mulgrave, Victoria 3170, or PO Box 325, Springvale, Victoria 3171. Telephone: (03) 561 2888, or from their authorised National or International representative. ■

GFS Electronic Imports have just announced the release of three new MFJ Electronic Morse Keyers and four new antenna couplers.

The MFJ-484 Grandmaster is the top of their range with a memory of up to 400 characters which may be used as up to twelve 25 character messages, plus one 25 to 100 character message. Also featured on the Grandmaster are a built-in monitor, speed, weight, tone and and delay repeat controls, plus built-in memory saver. Other features are dot-dash memories, Iambic operation and solid state keying.

The MFJ-481 Memory Keyer can store up to 100 characters in two 50 character messages. It features speed, volume and tone controls, plus a repeat function for repeating messages, as well as a tune function for transmitter tune-up. Built-in memory saver for loss of power and solid state keying.

MFJ's economy keyer, the MFJ-402, makes use of the new Curtis 8044 Keyer IC. It offers variable speed, internal pre-set weight control, built-in paddle, dot-dash memories and solid state transmitter keying.

Top of the line antenna tuner is the new MFJ-984, "3 kW Versa Tuner IV", which features a built-in 0-10 amp RF ammeter, SWR/0-200, 0-2 kW power meter, dummy load, 7 position coax switch and 4 : 1 balun. It is suitable for matching coax line and balance line up to 3 kW PEP power. Both tuning capacitors are 500 pF and rated at 6000 volts.

Next in the line is the MFJ-982, "3 kW Versa Tuner IV", which has all the features of the MFJ-984 except the SWR/power meter, RF ammeter and dummy load.

Lower down the power scale are the models MFJ-962 and MFJ-961, "1.5 kW Versa Tuner IIIs".

For more information contact GFS Electronic Imports, 15 McKeon Road, Mitcham 3132, Victoria. Phone (03) 873 3939. ■

LINEAR AMPLIFIERS

Vicom announce the availability of a new line of VHF Linear Amplifiers produced by the Tono Corporation for 146 MHz, 435 MHz and 28 MHz, with out put powers ranging from 30 to 130 watts.

Initially, the 146 MHz units will be available: the MR-1300E and the MR-900E.

The MR-1300E has an output power of 130 watts when driven with 15 watts and the MR-900E 90 watts under the same conditions. Both units employ a receiving RF amplifier which gives a gain of 13 dB.

Technically, these amplifiers offer increased performance because of a stabilised bias voltage using a special AVR circuit. Changeover from receive to transmit can either be manually controlled or carrier operated using a Schmidt circuit.

Further details can be obtained from Vicom, 68 Eastern Road, South Melbourne. Phone 699 6700. ■

AUTOMATIC ANTENNA TUNER

Daiwa Corporation of Japan have automated one of the last areas of amateur equipment to be automated.

Daiwa's Australian representative, Vicom, have just announced 500W PEP and 2.5 kW versions of an automatic antenna tuner.

The principal behind the operation is the use of the voltage sensed in a mismatched condition to control a servo motor which in turn can vary inductance or capacitance, thus reducing the detected reverse power from the load to a minimum.

In operation, either unit is switched to the band desired and the antenna to be used is selected. Provision is made for either of two antennas to be used. Matching is roughly done manually so that SWR is around 5 : 1 and when switched to automatic, final matching is completed by automatic control. When minimum SWR ratio is achieved it will be below 1.5 : 1. If required, finer tuning can be done manually.

Each unit contains a cross needle meter to indicate actual SWR, and a dummy load is included for initial setting up on the frequency it is desired to use.

Power required is 13.8 volts at about 0.2 amp and output impedance that can be matched range from around 10 ohms to 300 unbalanced.

LED readouts are used to indicate power ranges and motor action.

It is claimed that frequency excursions over a band will be simplified during base station contest working, and also for mobile operation where major frequency changes currently require returning of antenna or matching network.

Full details and pricing are available from Vicom, 68 Eastern Road, South Melbourne. Telephone 699 6700 or their dealers. ■

VICOM GAINS EXPERIMENTAL LICENCE

Vicom International Pty. Limited has received approval to run a VHF/UHF colour television translator and an FM transmitter at the coming EEEMC Exhibition to be held at the Sydney Showgrounds from 16-19th October.

The translator will be a Hirschmann 10W unit featuring high quality construction with unique failsafe systems and meets the Australain Broadcasting standards and CCIR specifications.

Hirschmann is an Austrian based company specialising in VHF/VHF and VHF/UHF television translators from 1 watt to 2 kW.

The FM transmitter will be run on equipment supplied by CCA Corporation of USA and will operate on 88.90 MHz.

The equipment can be seen running at stand 28 at the EEEMC Exhibition. ■

SOLID-STATE RF SIGNAL GENERATOR

The new B & K Precision Model E200D RF signal generator features solid-state circuitry. Six indi-

vidually shielded step attenuators plus variable fine output level control with calibrated meter provide widest range of outputs with known signal levels. Double shielding eliminates spurious radiation even at outputs at 1 uV and the internal crystal calibrator has an accuracy of better than 0.1 per cent. Generates 100 kHz to 54 MHz on fundamentals and 54 to 216 MHz on harmonics.

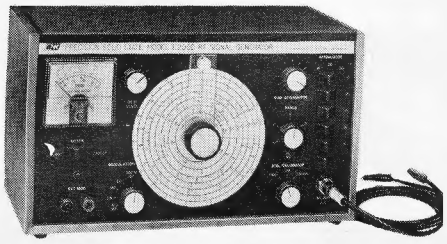

For further information contact Bruce McCarthy, Parameters Pty. Ltd., 68 Alexander Street, Crows Nest, NSW 2065. Phone: 439 3288. ■

EDDYSTONE DIECAST BOXES

The Eddystone Company have added two new water-resistant boxes and one new conventional type size to their range.

The water-resistant models are fitted with a Neoprene sealing ring and finished in Hammer Grey stove enamel. An earth connection facility is provided inside the boxes.

The new conventional type box measures 119 mm x 93 mm x 32 mm.

Full details are available from R. H. Cunningham Pty. Ltd., PO Box 4533, Melbourne, Vic. 3001. Telephone (03) 329 0633. ■

VICOM HAM NEWS

Vicom have just released their latest Ham News which is their Newsletter bringing news ,new releases, and technical tips.

Icom have released their IC511 which is a 6 metre companion to the IC211 and the IC701. A very welcome addition to the range.

Japan Radio Co. have released a very fine transmitter — the NSD505 — as a companion to their NRD505 receiver.

Vicom also have a synthesised two metre handheld.

Also included in the newsletter is the announcement of the expansion of the Professional Division of Vicom during 1979.

A very newsy and informative newsletter from Vicom. ■

VICOM APPOINTED LEADER DISTRIBUTOR

Vicom International Pty. Limited has been appointed Australian distributor for Leader Electronics Corporation. The agency was previously held by Warburton Franki Industries.

Leader manufacture an extensive range of high quality test instrumentation, including oscilloscopes, counters, chart recorders and specialist audio equipment.

The range is well priced for both hobby and professional use and is backed up by technical support from Vicom's Melbourne office and their interstate distributors. ■

DIVISIONAL NOTES

VK2

1979 GOLD COAST HAMFEST

The second annual Gold Coast Hamfest will be held on Saturday, 3rd November.

The Hamfest will feature mini lectures; trade displays; a demonstration station with HF UHF, ATV and RTTY; flea market; junk shop; book shop; competitions; plant sale; cooking demonstration and many other items for the whole family.

Amateur Radio Awards will be on show and the Ham of the Year Award for the Gold Coast area will be made.

The Hamfest will be held at the Burleigh Heads Scout Hall on Saturday, 3rd November.

A Hamfest Contest will be held from Saturday, 27th October, to Saturday, 3rd November.

One contact per band per 24 hour period with a member of the Gold Coast Amateur Radio Society.

Full details may be obtained from the Club and logs may be returned at the Hamfest or by post at PO Box 558, Southport 4215, before Saturday, 17th November. ■

BLUE MOUNTAINS AMATEUR RADIO CLUB FIELD DAY

The Blue Mountains Amateur Radio Club will be holding its annual Field Day on Sunday, 25th November, 1979. The venue this year will be Springwood High School, Grose Road, Springwood. Home-brew competition, auction and various events will be staged throughout the day. Registration will be $2 for adults and $1 for students if competing in the events, otherwise free admission to all. So come and meet your fellow amateurs in the mountains and have an enjoyable day. Further details from PO Box 54, Springwood 2777.

VK3

AMATEUR RADIO LTD.

During the late sixties when the Victorian Division was located at 478 Victoria Parade it was apparent that we would need to look for new premises. To this end to increase the value of the property the Council decided to buy up neighbouring properties. The potential for borrowing money was soon exhausted and the Council considered selling Debentures. Because the Division had no charter to sell debentures a subsidiary Company was set up for that purpose which was called Amateur Radio Limited.

Two hundred and eighteen $50 debentures were sold to members with a rate of 4 per cent per annum. The debentures became due for repayment in December 1978. Because the continually rising cost of running the Company (AR limited) offset the low rate of interest the Council decided to completely pay out all money owed. The Company will be kept in some form to protect the name. To close all activity of Amateur Radio Limited members were asked to either donate their debentures for the purpose of mortgage reduction or claim their money back.

As at 17-6-79 $2,200 has been donated for the reduction of mortgage and $5,350 has been redeemed. The total of $7,550 eliminates most of the debt owned by AR Limited. We would like to gratefully acknowledge the names of the following persons who donated their debentures for the reduction of mortgage of the Victorian Division. A number of others not listed here have donated their debentures to WARC and other Institute activities.

W. J. Falconer VK3AWF, A. B. D. Evans VK3VQ, K. V. Scott VK3SS, E. Chick VK3GG, Mrs. M. A. Henry VK3YL, W. M. Rice VK3ABP, W. G. H. Daniel VK3NX, A. I. Morrison VK3ZBY, B. L. McCubbin VK3SO, C. H. Utber VK3AHU, R. F. Lloyd VK3KK, A. D. Costello VK3YT, A. J. Stewart VK3AS, E. A. Phillips VK3BIX, F. J. Sullivan VK3ZJ, K. J. Horan VK5IT, Dr. P. S. Lang VK3ADN, H. G. Hodge VK3HE, C. N. Pickering VK3ATP, A. M. Goode VK3BDI, I. Tarbit VK3AL, O. T. Lucas VK3AVX, H. S. Voake VK3AVQ, Dr. F. K. McTaggart VK3NW/VK2BNW, J. B. Payne VK3AZT, E. M. Clyne VK3HZ, W. R. Blakeley (Deceased), Ron Jones VK3WL, B. H. Thomas VK3ZQF, P. D. Carter VK3AUO, I. C. McKellar VK3ZAM.

Issued on behalf of the Directors of Amateur Radio Limited which is also the Council of the Wireless Institute of Australia, Victorian Division.

MELBOURNE TWO METRE FOX HUNT

The winner of the VICOM competition for the best performance in the monthly two metre fox hunt was won by Greg Williams VK3ZXW. This competition ran over a twelve month period and concluded in July 1979. The competition was sponsored by VICOM and put a great deal of competition into the fox hunt.

Greg Williams VK3ZXW put up a fine performance in a very close contest. Greg was presented with the prize of an IC22S by Russell Kelly VK3NT from VICOM.

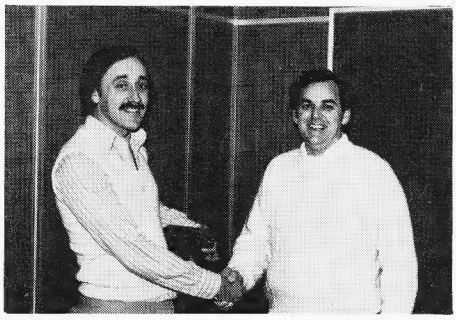

Russell Kelly VK3NT of VICOM presenting the IC22S to Greg Williams VK3ZXW.

Greg was pushed all the way by spirited competition from Ewen VK3BMV and Martin VK3YJM.

The fox hunt, which is held on the third Friday of each month, was very well attended during the period. The support of this activity by VICOM in this way is much appreciated. ■

HAMADS

- Eight lines free to all WIA members. $9 per 3 cm for non-members.
- Copy in typescript please or in block letters to P.O. Box 150, Toorak, Vic. 3142.
- Repeats may be charged at full rates.
- Closing date: 1st day of the month preceding publication. Cancellations received after about 12th of the month cannot be processed.
- QTHR means address is correct as set out in the WIA 1979 Call Book.

FOR SALE

Realistic DX-160 General Coverage RX, little use, in good cond., price $110. Brian VK4ST, QTHR. Ph. (071) 91 1172.

Multi 7. Sell xtals T. and R. new for Ch. 44, or swap for Ch. 47 or 43. VK5WG, QTHR.

Siewa SV230 FM Txcvr, 25W, simp. 40, 50, 51, rpts 2, 3, 4, 6, 8. $160. P. Willmot (03) 772 1802.

Grandmaster Memory Keyer MFJ 484, latest model with no less than 12 porgrammable memories, some of which can be switched together for long messages, includes power supply and Browns famous twin paddle, all in mint cond., $160, ONO. VK2BEK, QTHR. Ph. (02) 476 5096.

Kyokuto 2m FM Tcvr., fully synthesised, with manual, accessories, etc. $225; Yaesu FT75B HF mobile or base rig, 80-10 SSB 120W PEP, AC and DC supplies included, manual and accessories, $375; HA800 Lafayette Rx, AM USB, LSB, 160 through 6m, good cond., manual and accessories, $100; Barlow Wadley RX, .5 to 30 MHz, USB, LSB, cont. coverage, $150; miniscope soldering iron and transformer plus spares, $20. VK2AOE, QTHR. Ph. (02) 449 6364.

ICOM IC 280 2m FW Transceiver, 8 months old, mint cond., $400, ONO; may consider trade of IC22, A-S. VK3YMW. Ph. (058) 21 9458.

Galaxy V Mk. 2 Transceiver with external remote VFO, instruction manual and spare output valves, $250. Bill Thomas VK5BE, QTHR. Ph. (08) 258 6070.

FT620 6m Transceiver, 50-54 MHz coverage, good condt., recent Tx and Rx check to spec., LO board improved, $350. VK4ZZI, QTHR. Ph. (07) 224 6875 Bus.

Xtls 10 to 2 MHz IF Rx R1, 2, 4, 6, 7, 8, Simplex 40, 49, 50, 51, R3 input Rx, $5 each. VK3YNB, QTHR.

Kenwood TS120S 200W PEP HF 10-80m Transceiver, brand new with English manual, $580. Bill VK3SB, QTHR. Ph. (03) 550 3521.

QST, January 1945-December 1975; what offers for the lot; repeat, the lot. VK3AKZ, QTHR. Ph. (03) 24 6149 A.H.

Standard C6500 Comm. Rx, 0.5-30 MHz, AM, SSB, CW, 240V AC or 12V DC, as new in carton, $285. VK3UJ, QTHR. Ph. (03) 874 5632.

Tandy TRS80 Home Computer, 16k ram, level 1 basic, with chess, machine language and assembler programmes, cost $1300 sell $950; QM70 70 cm linear with blower, 40W output, $75; Hills telescopic aerial pole, 5 sections 10 to 50 ft. high with guys, $50; 10 el. 2m yagi, $25. Ph. (02) 888 2475.

Multi-Palm II, complete with original packing, excellent cond., includes leather case and 12 xtal ch. rptrs 1 to 9 and 13, Simplex 40 and 50, new value $273.50, offers around $230; extra 450 mA/hr. plug-in battery pack available if required. VK2WE, QTHR. Ph. (02) 487 1273 after 6.00 p.m.

Teletype Model 19 Page Printer-Perforator and model 14 transmitter distributor. Ph. (02) 623 1137.

Yaesu 101B, one owner, all plugs, matching loudspeaker, mic., hand book, in excellent cond., no mods., $585. VK6HE, QTHR. Ph. (09) 293 2160.

Kyokutu 2m Transceiver, $280; Tram XL5 transceiver, modified to 10m, $180; Kenwood KP202, $140; all good cond. VK2WW, QTHR. Ph. (02) 546 1927.

Kenwood TS520S, absolutely new, never used, in original package, urgent sale because of illness, still in warranty, genuine bargain, $550, ONO. 17 William St., Henley, via Gladesville 2111. Ph. (02) 89 2530.

Yaesu 101E, as new, few hours use only, c/w box, book, fan, AC/DC, mike, etc., $650; also FT101, looks and works like new, $450; both used by myself only. VK3SS, QTHR. Ph. (051) 47 2265.

Icom IC22S VHF Transceiver S/N 62013629, perfect cond , completely unmodified and complete with all accessories and RF cable, $250; amateurs only. Ph. (07) 48 7434 A.H.

Sell or Swap: Vintage gear 1925-50 era, large variety valves Rx and Tx, var. conds., coils, assortment component parts, dials, rheos, chokes and other items (write for list) too numerous to mention. VK4SS, 35 Whynot St., West End, Brisbane 4101.

Hammarlund HQ215 Rx, top quality US solid state HF Rx to mil-specs., 24 bands (all amateur 80-10m bands only as standard), each band 200 kHz spread tuning rate 10 kHz per dial revolution, SSB, CW, AM, variable BFO, Q notch rejection filter, 3 filter positions (only SSB filter included), 240V AC or 12V DC, photo/circuit diagram for genuine buyer, $200, ONO. VK2ZDJ. Ph. (069) 62 4937 A.H.

Hidaka 3 el Yagi Beam with balun, tunes 26-28m, used for only 7 months, a bargain at $65. Den VK2ZVA. Ph. (02) 728 6059.

2m 8874 Linear Amp , home brew, 10W in 400W out, complete with blower, h/d remote switched PSU, full metering, best offer. FT200 with H/B P/S, $320; solid state H/B 2m transverter, works direct from FT200 or T101B, 30W output, U310 low-noise pre-amp, best offer; model 15 TTY with tape punch, $50. Dave VK3AFR. Ph. (03) 347 0439.

Mocom 35 UHF Mobiles: 2 x 2 ch. 10W 450-570 MHz FM tcvrs, suit amateur conversion, one complete with mic., mounting cradle and h/book, other missing knobs and front panel, both very good cond., $120 the lot, or will separate. D. Horton VK3ZHY. Ph. (03) 347 0439.

Microwave Modules MMT 432/28 Transverter, brand new, $180; MFJ941, ATU, 1.8-30 MHz, includes SWR, power meter and 5 pos. antenna switch, ideal for portable use, brand new, $80. G. H. Herden VK5ZK, QTHR. Ph. (08) 297 4950.

Yaesu FT101E, AC-DC with CW filter, $650; TH3JNR with balun, as new, $130; SL55 audio notch filter, $85; HC500 ATU, $90, or offers. VK2NQI. Ph. (02) 636 2414.

Ampex 7003 1 in. Video Tape Recorder, B. & W., modified to high band, only requires corrector for colour, c/w 6 tapes. Ph. (063) 62 3464 A.H.

FM144 2m Transceiver, $270; KP202 2m transceiver, $150; freq. counter DFM 600, $360; multimeter Sanwa EM300, $50. VK3GQ, QTHR. Ph. (03) 306 8336 after 16.30h.

ADVERTISERS' INDEX

AMATEUR RADIO ACTION	36
BAIL ELECTRONIC SERVICES	51
BRIGHT STAR CRYSTALS	34
CHIRNSIDE ELECTRONICS	2
CUSTOM COMMUNICATIONS	42, 43
CW ELECTRONICS	36
DELTA COMMUNICATIONS	45
DICK SMITH ELECTRONICS	35
G.F.S. ELECTRONIC IMPORTS	41
GRAHAM STALLARD	28
HAM RADIO SUPPLIERS	7
IMARK PTY. LTD.	34
LINDA LUTHER	50
PHILIPS PTY. LTD.	37
SIDEBAND ELECTRONIC IMPORTS	7
SIDEBAND ELECTRONIC SALES	44
SCALAR INDUSTRIES PTY. LTD.	6
SPECTRUM INTERNATIONAL	28
TRIO KENWOOD	OBC
VICOM INTERNATIONAL	25, 26, 27
WIA — NSW DIVISION	7
WIA — TAS. DIVISION, NORTHERN BRANCH	34
WILLIAM WILLIS & CO.	7

Rotator CDE ARR22XL with control box, hardware, inst., little use, as new, in carton, $95; mic. desk, Turner super side kick, in-built preamp, mint cond., inst., circuits, carton, $35; monitorscope, Yaesu YO 301, complete accessories, inst., manuals, mint cond., carton, $285; KW E-Zee Match ATU, $40. VK2BXU. Ph. (02) 57 4648.

Yeasu Combination FL400/FR400, with all options, incl. 2/6m, AM, FM, 4 filters installed, extra xtal for full 2m coverage, all manuals and spare tubes, $450, ONO; also TV506 6m transverter, suite TS520/820, Dentron super tuner, unused, $150; DGI counter for TS820, new, $150. VK2BHF, QTHR. Ph. (02) 98 6249.

Kenwood TS520, AC-DC, 1977 model, top cond., low transmit hours, never used portable, $530. VK3BJY, QTHR. Ph. (03) 232 2970.

Kenwood TS520S, 3 months old, perfect cond., unmodified, in original package, never used, still has 3 months Kenwood warranty, $650. David VK2VBD, Wollongong. Ph. (042) 61 1635.

Balun, Heath, air wound 1 : 1 or 4 : 1, 3-30 MHz, $10; speech processor, Cox Ampress (USA), suit any SSB rig, $30; antenna noise bridge, Omega T, $25; all in working order with instructions. VK3WW, QTHR. Ph. (03) 465 2991.

WANTED

Radio and Hobbies, May 1939 (Vol. 1, No. 2), August 1940 (Vol. 2, No. 5), Novmeber 1940 (Vol. 2, No. 8). Jim Gordon VK3ZKK, QTHR. Ph. (03) 870 1745.

Duo-Band or Small Tri-Band Beam (TH3JR or similar, will pay top price for good unit, will reimburse all correspondence costs. VK3VFK, QTHR. Ph. (051) 52 3137 Bus., (051) 56 8310 A.H.

Urgently. Copy of instruction manual or circuit diagram (with voltages) for Heathkit oscilloscope, model OM3. T. Tongs VK7TT, QTHR.

Geloso SSB Tx, model G4/225, any cond., VK2ATE, QTHR. Ph. (048) 61 2725.

Early Spark Gear, helix and interruptor coils, hornspeakers, old morse keys, any cond., battery B/C sets, table cylinder horn phono, early TV eqpt. VK4SS, 35 Whynot St., West End, Brisbane 4101.

Dead Ken KP202, hand-held or sim., in any cond., for spare parts and/or possible resurrection. Richard Cowles. Ph. (02) 699 9403 A.H.

SILENT KEYS

It is with deep regret that we record the passing of —

Mr. D. S. T. J. SORAGHAN	**VK2PU**
Mr. N. F. TAYLOR	**VK2ASQ**
Mr. C. A. WALCH	**VK7CW**
Mr. E. L. BENNETT	**VK3YHB**
Mr. H. D. BOAST	**VK3AX**
Mr. D. G. SEMMENS	**VK3AEY**

OBITUARY

FRED CARRUTHERS VK2PF

Fred Carruthers QRT on 10th July, 1979, following an intermittent illness which had plagued him for the past year. He was 74 years of age, and had lived a full and happy life. Although he was an active amateur operator for most of his life, his amateur activities were particularly rewarding for him in his later years.

His Certificate of Proficiency was issued on 12th May, 1933, and in his early years as an amateur he was very active in WIA work. His technical skill was put to good use in the service of his country when in 1940 he was called from the reserve and entered the Army Signal Corps as an officer, where he served throughout World War II. On return from active service, he resumed his amateur activities, and soon became recognised as an avid DXer and award hunter. He held DXCC No. 105, issued on 15th July, 1967, and also the Certificate Hunters' Club membership No. 3435, bearing the Achieved 50 Awards seal. He also held the ARRL Old Timers' Club membership issued on 20th September, 1966, and the Old Timers' Club (Aust) membership issued on 11th May, 1977. In addition, he was a member of the Royal Signals Amateur Radio Society.

On the local scene, he was a keen member of the Summerland Amateur Radio Club at Lismore and used his expertise as a lawyer to give much valued guidance in the formative years of the Club. He was a regular caller on the VK2 so-called 3695 net, which is a perpetual morning feature in the eastern States, providing a forum for debate on any subject known to man. Right up to the time of his last illness, and even afterwards direct from hospital when he was well enough, he could also be heard regularly on the morning net through Summerland Repeater VK2RIC.

He is sadly missed by his family and all who knew him.

From Fred Herron VK2BHE. ■

Valves, 4X150A (7034, CV2519) or 4CX250B, also base and chimney to suit. Box 70, Frenchs Forest 2086. Ph. (02) 451 0818.

National HRO Rx or similar, also circuit for Marconi CR150 Rx. VK2AJT, QTHR. Ph. (044) 22786.

EXCHANGE

Icom IC22S 2m FM Tcvr, in mint cond., for HF QRP transceiver and cash, adjust either way. VK2BVH, QTHR. Ph. Brian (02) 525 2547.

TRADE HAMADS

QSL Cards, Log Books, Contest Sheets — send 20c stamp for samples and prices to Linda Luther VK4VV, PO Box 498, Nambour, Qld. 4560.

BAIL ELECTRONIC SERVICES

HAM RADIO SPECIALISTS

STOP

Before you invest in new amateur communications equipment or accessories, spare 60 seconds to read this advice.

"Any salesman will find a way to give you a better price — but for every dollar you save that way, you spend twice as much to find the after sales service you need. Before you buy, ask another Ham where he gets good sales assistance and concerned service attention."

At Bail Electronic Services we continue to offer first class equipment with a sure back up service.

A selection of the equipment available from Bail.

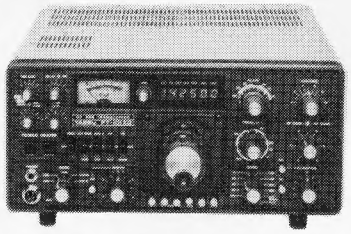

All-New FT-101ZD Series:
High-performance HF Transceiver with today's technology backed by a proud tradition. This rig includes variable IF bandwidth, digital plus analog frequency display, a built-in RF speech processor, and wide receiver dynamic range.

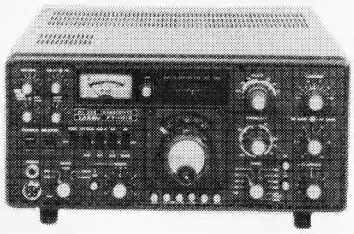

FT-101Z, Analog Model:
Top performance for the budget-minded amateur. The precision VFO gear mechanism is coupled to an easy-to-read analog display, providing resolution to greater than 1 kHz. All other features — the variable IF bandwidth, RF speech processor, superb noise blanker, VOX — are identical to the FT-101ZD. Counter and Dig. display can be added later. Set is basic and you add the extras you need.

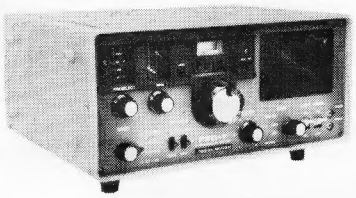

FRG7 Synthesized Receiver.
For amateurs, novices and shortwave listeners. Electronic band changing with 0.5 - 29.9 MHz continuous coverage. Uses Wadley Loop to derive synthesized hetrodyne oscillator signal. LSB, USB, AM and CW. Frequency readout better than 10KHz, stability within 500Hz. Write to Bail for full details.

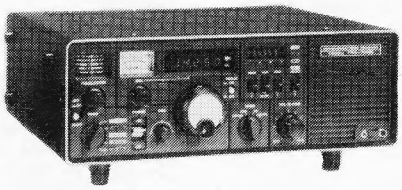

Digital Display Communications Receiver with CPU Digital Clock and Timer — FRG-7000
The digital clock and timer, controlled by a CPU chip will read out both local and GMT time and will control peripheral station equipment such as a tape recorder.

Other equipment from Bails includes Antennas, desk and hand microphones and headphone sets such as the YH-55 illustrated.

YH-55

YD-844

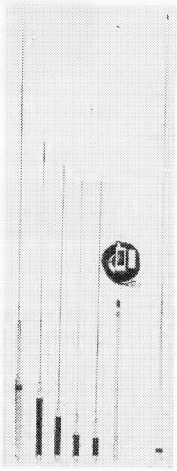

As the authorised Yaseu agent and factory representative in Australia since 1963, we provide after-sales service, spares availability, and 90-day warranty except power valves and semi-conductors.

bail

60 Shannon St., Box Hill North, Vic., 3129. Phone 89 2213
Distributors in all states and N.T.

Jim Bail VK3ABA
and staff

JAS7980-5

HAM RADIO SPECIALISTS

AGENTS & REPS: — **W.A.** COMO (09) 450 4379; PERTH (09) 21 7609; KALGOORLIE (090) 21 1906; **S.A.** PLYMPTON (08) 293 2155; **TAS.** LAUNCESTON (003) 44 5000; **N.S.W.** MASCOT (02) 667 1650; SEVEN HILLS (02) 624 2691; NEWCASTLE (049) 69 2040; WAGGA WAGGA (069) 21 2125. COFFS HARBOUR (066) 54 3206; TAMWORTH (067) 66 1363; INVERELL (067) 22 1300; **QLD.** BRISBANE (07) 221 7272; ALBION (07) 57 6830; TOWNSVILLE (077) 79 8179; CAIRNS (070) 51 4826; **N.T.** DARWIN (089) 81 9237.

KENWOOD

R-1000 RECEIVER* DELIVERS THE SOUNDS OF THE WORLD TO YOU — 'MAGNIFICENTLY'

*Large stocks arriving in Australia shortly.

FEATURES

1. HF general coverage: 200 Khz-30 Mhz SSB/CW, AM.
2. Easy operation for tuning by 1 Mhz step band selector switch and 1 Mhz coverage VFO. A preselector is not equipped.
3. The digital frequency display indicates to 1 Khz and the analogue display indicates to 10 Khz.
4. Built in ceramic filters. AM-wide — 9 Khz (—6db). AM-narrow — 5 Khz (—6db). SSB/CW — 2.7 Khz (—6db).
5. Built in Noise Blanker.
6. RF-ATT: Switchable for 0,20, 40 and 60 db.
7. Tone control.
8. Switchable antenna terminal: Below 2 Mhz — 1 Kohm. Over 3 Mhz — 50 ohm/1 Kohm switchable.
9. Built in digital x'tal clock. 12 hour indication with AM/PM display by LED. Timer facility for power on and off-will not indicate time while the power is off.
10. Recording terminal with a recorder control terminal which enables the automatic recording with the timer.
11. Mute terminal.
12. Dimmer for LED and lamps.
13. Built in 10 cm speaker. Optional external speaker available.
14. Designed to operate on 100/120/220/240 volt AC power 40/60 hz and 13.8 volt DC (external) power.

TRIO-KENWOOD (AUSTRALIA) PTY. LTD.
31 Whiting Street, Artarmon, Sydney, N.S.W. 2064. Telephone (02) 438-1277

Authorised Distributors:

N.S.W.: SIDE BAND ELECTRONICS SALES (02) 438-4191 — CUSTOM COMMUNICATIONS (02) 635-6399
SIDE BAND ELECTRONICS IMPORTS (047) 51-1394 — EMTRONICS (02) 398-6378 •
VIC.: VICOM IMPORTS PTY LTD (03) 699-6700 • ***QLD.:*** MITCHELL RADIO CO (07) 57-6830 •
S.A. & N.T.: INTERNATIONAL COMMUNICATIONS SYSTEMS PTY LTD (08) 47-3688 •
W.A.: WILLIS TRADING CO (09) 321-7600 • ***TAS.:*** ADVANCE ELECTRONICS (003) 31-5688 •

PLUS MANY OTHER REGIONAL OUTLETS THROUGHOUT AUSTRALIA

Call into your nearest authorised distributor and ask to see this and other high performance Kenwood units